EC R-454B Model Series
Commercial Water Source Heat Pumps

Engineering Submittal Sheet

BOSCH

Overview and Certifications

AHRI CERTIFIED® www.ahridirectory.org

Intertek

- 6 to 30 ton capacities
- Two stage compact cabinet
- Single blower high static pressure capabilities
- Take-apart construction available
- Low GWP ready (R-454B refrigerant)

Commercial WSHP Product Portfolio

Product		Water-to-Air							Water-to-Water	
		CP	CP Splits	CF	CL	CA	EC	MC	WT	WW
Price		$$$	$$$	$$	$	$	$$	$$	$$	$$
Model Sizes <6 Ton	007			X	X					
	009			X	X	X				
	012			X	X	X				
	015			X	X	X				
	018			X	X	X				
	024	X	X	X	X					
	025								X	
	030			X	X					
	035								X	
	036	X	X	X	X					
	041									
	042			X	X					
	048	X	X	X	X					
	049								X	
	060	X	X	X	X					
	061								X	
	070	X		X	X					
	071								X	
Model Sizes >6 Ton	072						X			
	096						X			
	120						X			X
	122									X
	150						X			
	151						X			
	180						X			X
	181						X			
	210						X			X
	240						X			X
	300						X			
	360						X	X		X
	420									X
	480							X		
	600							X		
	720							X		

Featured model

Bosch Thermotechnology Corp.
Londonderry, NH • Watertown, MA • Ft. Lauderdale, FL

Bosch Thermotechnology Corp. reserves the right to make changes without notice due to continuing engineering and technological advances | BTC 761008103 H | 09.2026

Tel: 1-800-283-3787 | www.bosch-homecomfort.us

Model Nomenclature

EC 300 - 4 VT C - S B S I U C - X A T A X X X X X 7 X X X X 1 D X X X S B A

1-2 3-5 6 7 8-9 10 11 12 13 14 15 16 17 18 19 20 21 22 23 24 25 26 27 28 29 30 31 32 33 34 35 36 37 38 39 40

MODEL:
EC

NOMINAL CAPACITY:
072, 096, 120, 150, 151, 180, 181, 210, 240, 242, 300, 360

ELECTRICAL CONFIGURATION:
1 - 208-230/60/1
3 - 208-230/60/3
4 - 460/60/3
5 - 575/60/3

CABINET CONFIGURATION:
HZ - Horizontal
VT - Vertical

COAX OPTIONS:
C - Copper
N - Cupro-Nickel

WATER CONNECTIONS:
F - Front
S - Side

RETURN AIR CONFIGURATION:
B - Back
F - Front
L - Left
R - Right

DISCHARGE AIR LOCATION:
E - End Blow
F - Front
R - Rear
S - Straight Through
T - Top

FAN/MOTOR OPTION:
B - Belt Drive
I - Belt Drive, Inverter Duty

AIR COIL:
U - Uncoated
D - DuoGuard

REVISION LEVEL:
C - Current

ELECTRIC HEAT:
X - None

CABINET CONSTRUCTION:
A - G90 Steel / 1/2" Standard 1.5LB Dual Density Fiberglass
B - T/A G90 Steel / 1/2" Standard 1.5LB Dual Density Fiberglass
C - G90 Steel / 1/2" Closed Cell Foam
D - G90 Steel / 1/2" Standard 1.5LB Dual Density Fiberglass, Extra Quiet
E - T/A G90 Steel / 1/2" Closed Cell Foam
F - G90 Steel / 1/2" Closed Cell Foam, Extra Quiet
J - T/A G90 Steel / 1/2" Closed Cell Foam, Extra Quiet
L - T/A G90 Steel / 1/2" Standard 1.5LB Dual Density Fiberglass, Extra Quiet

APPLICATION:
G - Extended Range (Geothermal)
T - Standard Range

CODE STRING LEVEL:
A - Revision

CHANNEL:
B - Bosch

STANDARD/SPECIAL:
S - Standard
A - Special #1

AGENCY OPTIONS:
X - None

MOTOR/BLOWER ORIENTATION:
X - Standard Blower and Motor Orientation
B - Blower Rotated 180 Deg, Motor Standard
M - Blower Standard, Motor Rotated 180 Deg
N - Blower and Motor Rotated 180 Deg

DRIVE SPEED (MC ONLY):
X - N/A

MOTOR HP/QTY (BELT DRIVE ONLY):
A - 1 **B** - 1.5 **C** - 2 **D** - 3 **E** - 5

AIR FILTRATION:
1 - 1" Throwaway - 1" 2-Sided Filter Rack (Side Access)
3 - 1" Throwaway - 2" 4 Sided Filter Rack (Side Access)
8 - 1" Throwaway - 2" 2 Sided Filter Rack (Side Access)

DESTINATION SPECIFIC REQUIREMENT:
X - None
A - French & English Documentation

ECONOMIZER:
X - None
E - Economizer With 3 Way Valve and Controls
H - Hot Water Coil

WATER FLOW CONTROL OPTIONS:
X - None

CONTROLS:
X - Standard
M - DDC - Multi-Protocol (BacNET, Modbus, N2)
P - DDC - Multi-Protocol (BacNET, Modbus, N2) w/ Expander
I - Inverter
J - DDC - Multi-Protocol (BacNET, Modbus, N2) w/ Inverter & Expander
T - DDC - Multi-Protocol (BacNET, Modbus, N2) w/ Inverter

TRANSFORMER:
7 - 75 VA
1 - 100 VA

REFRIGERATION:
X - None
B - Hot Gas Bypass
C - Hot Gas Bypass with Hot Gas Reheat
F - Hot Gas Bypass w Hot Gas Reheat, Modulating
G - Hot Gas Bypass w Hot Gas Reheat, On/Off & Straight Cool
H - Hot Gas Reheat - On/Off
J - On/Off HGRH & Straight Cool
K - Hot Gas Bypass w Hot Gas Reheat, Modulating & Straight Cool
M - Hot Gas Reheat, Modulating
N - Modulating HGRH & Straight Cool
S - Straight Cool
T - HGBP & Straight Cool

ELECTRICAL OPTIONS:
X - As default for non used electrical codes
B - Blower Monitor Relay
D - Phase Monitor
G - Boilerless control
K - Fire Alarm Relay/Dual Power
A - EMS relay
C - Compressor Monitor Relay
E - Pump/valve relay
H - Flow Proving Switch
M - Wire transformer to 208 volts

Bosch Thermotechnology Corp. reserves the right to make changes without notice due to continuing engineering and technological advances | BTC 761008103 H | 09.2026

AHRI Ratings (13256-1)															
Model Number	Water Coil Option	Water Loop Heat Pump				Ground Water Heat Pump				Ground Loop Heat Pump				CFM	GPM
		Cooling 86 deg.F		Heating 68 deg.F		Cooling 59 deg.F		Heating 50 deg.F		Cooling 77 deg.F		Heating 32 deg.F			
		Capacity Btuh	EER Btuh/W	Capacity Btuh	COP	Capacity Btuh	EER Btuh/W	Capacity Btuh	COP	Capacity Btuh	EER Btuh/W	Capacity Btuh	COP		
072	Cu/CuNi	77,500	16.25	86,500	5.35	85,100	24.40	69,900	4.55	80,600	18.85	55,900	3.85	2,400	18.00
096	Cu/CuNi	101,300	16.50	126,200	5.25	109,100	24.45	102,600	4.65	104,000	18.90	82,000	4.00	2,820	21.00
120	Cu/CuNi	125,700	13.40	157,600	4.40	134,900	18.95	128,900	3.90	129,100	15.15	102,300	3.30	4,000	28.00
150	Cu/CuNi	148,800	17.70	167,600	6.00	162,300	26.45	134,400	5.20	153,600	20.25	106,100	4.35	5,000	35.00
151	Cu/CuNi	148,900	17.75	163,000	5.30	162,000	26.45	131,100	4.55	153,400	20.20	103,800	3.75	5,000	35.00
180	Cu/CuNi	173,100	16.35	182,300	5.55	190,200	24.85	144,400	4.65	179,200	18.80	112,200	3.80	6,000	42.00
181	Cu/CuNi	170,700	14.00	180,500	4.90	187,100	21.25	143,600	4.15	176,500	16.10	112,300	3.45	6,000	42.00
210	Cu/CuNi	214,800	15.05	257,200	5.05	239,600	23.15	210,200	4.10	221,800	16.55	167,900	3.70	7,000	50.00
240	Cu/CuNi	248,800	15.60	323,600	4.90	268,300	23.10	263,300	4.25	255,800	17.65	209,500	3.35	8,000	60.00
242	Cu/CuNi	237,100	13.90	304,600	4.60	262,100	21.15	248,400	3.95	244,100	15.85	210,300	3.35	8,000	60.00
300	Cu/CuNi	310,900	14.60	403,300	4.45	336,800	20.15	329,200	3.95	319,700	16.30	264,400	3.40	10,000	75.00
360	Cu/CuNi	386,000	13.30	458,900	4.20	419,400	18.50	413,800	4.00	399,500	14.85	303,500	3.15	12,000	90.00

Units sized 072-0120 are AHRI Certified while units sized 150-360 are rated in accordance with AHRI/AHRI/ISO 13256-1.

Bosch Thermotechnology Corp. reserves the right to make changes without notice due to continuing engineering and technological advances | BTC 761008103 H | 09.2026

Vertical Unit Configurations & Dimensions - EC072-120 Model

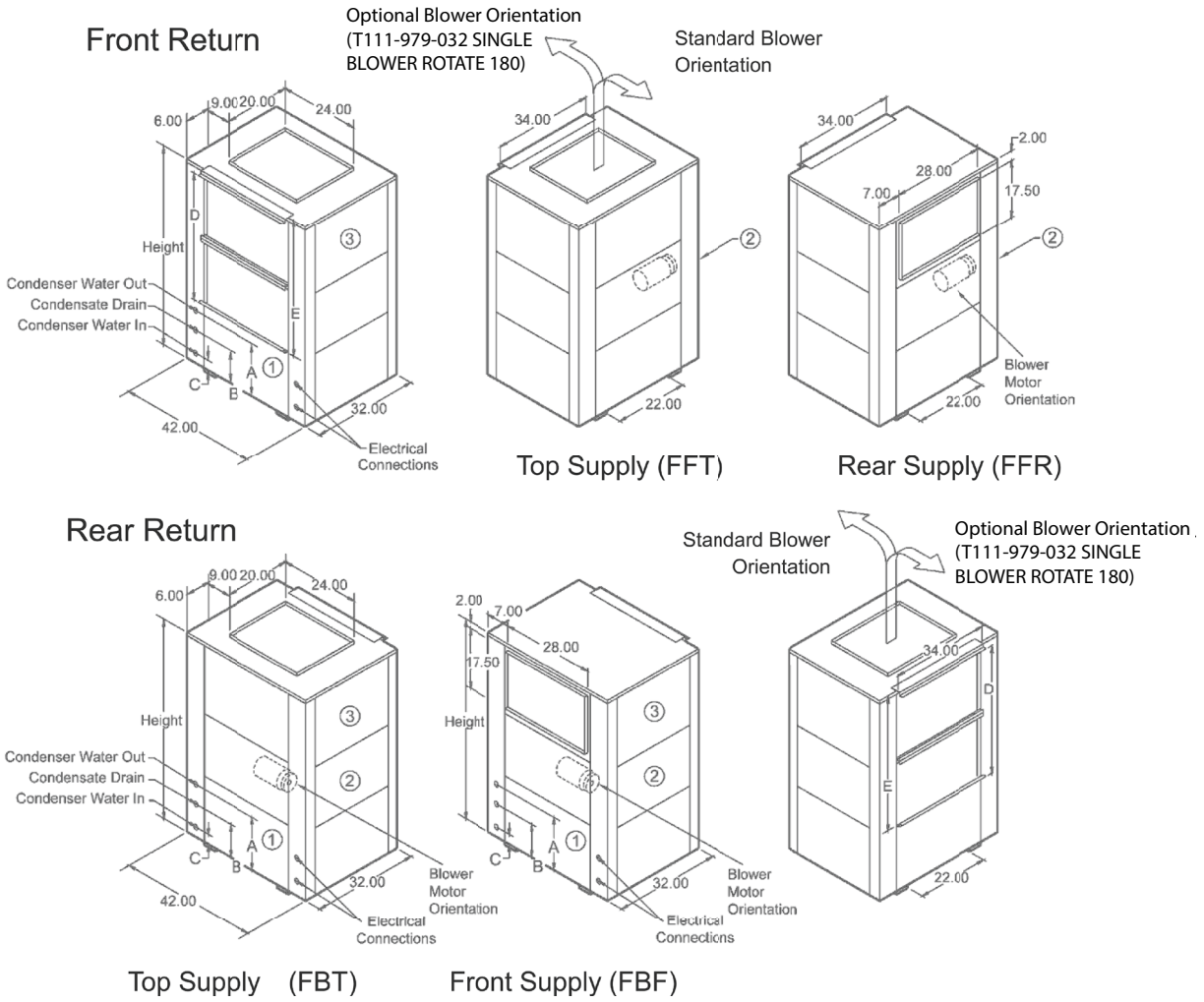

Vertical Unit Dimensions - EC072-120 Model

Model Number	Width	Depth	Height	Distance Between Base Rails	Top Supply: Supply Depth	Top Supply: Supply Width	Top Supply: Front to Supply	Top Supply: Left Side to Supply	Top Supply: Distance b/t Supply Ducts	Rear Supply: Supply Height	Rear Supply: Supply Width	Rear Supply: Top to Supply	Rear Supply: Right Side to Supply	Rear Supply: Distance b/t Supply Ducts	A: Water Out	B: Bottom to Condensate Drain	C: Water In	R/A Duct Width	Distance Between R/A Ducts	D: R/A Duct Flange Height	E: Filter Rack Height	Condenser Water Connections (FPT)	Condensate Drain Connection (FPT)	Recommended Replacement Nominal Filter Size - 1" thick
072	42.00	32.00	62.00	22.00	20.00	24.00	6.00	9.00	-	17.50	28.00	2.00	7.00	-	14.75	8.50	2.75	34.00	-	38.00	40.00	1"	3/4"	20 x 34.5 (2)
096	42.00	32.00	62.00	22.00	20.00	24.00	6.00	9.00	-	17.50	28.00	2.00	7.00	-	14.75	8.50	2.75	34.00	-	38.00	40.00	1"	3/4"	20 x 34.5 (2)
120	42.00	32.00	62.00	22.00	20.00	24.00	6.00	9.00	-	17.50	28.00	2.00	7.00	-	15.00	9.00	3.00	34.00	-	38.00	40.00	1 1/2"	3/4"	20 x 34.5 (2)

All dimensions in inches unless otherwise noted.
All dimensions within +– 0.125".
Specifications subject to change without notice.

Bosch Thermotechnology Corp. reserves the right to make changes without notice due to continuing engineering and technological advances | BTC 761008103 H | 09.2026

Vertical Unit Configurations & Dimensions - EC151-181 Model

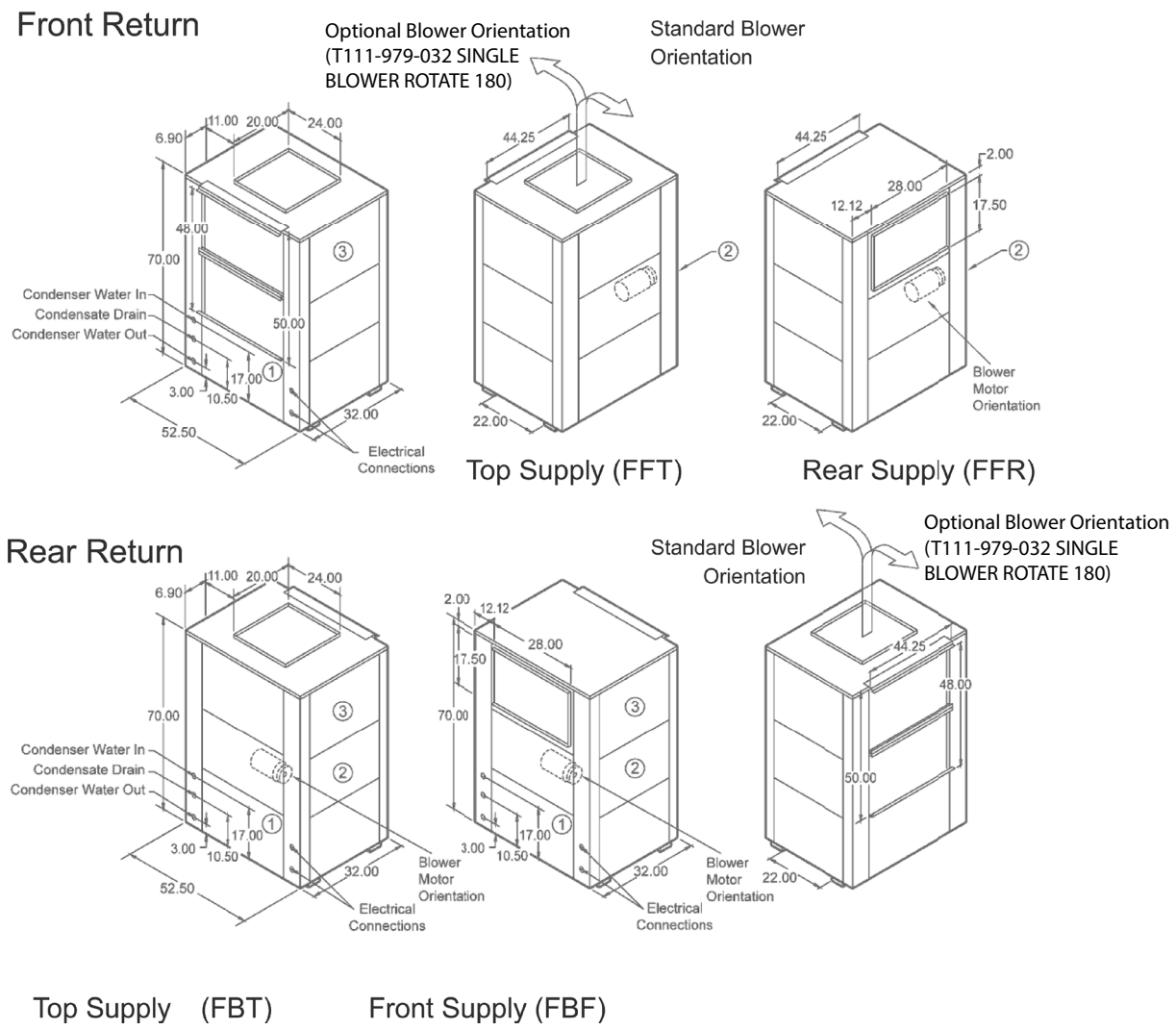

Vertical Unit Dimensions - EC151-181 Model

Model Number	Width	Depth	Height	Distance Between Base Rails	Top Supply:					Rear Supply:					A	B	C	R/A Duct Width	Distance Between R/A Ducts	D	E	Condenser Water Connections (FPT)	Condensate Drain Connection (FPT)	Recommended Replacement Nominal Filter Size - 1" thick
					Supply Depth	Supply Width	Front to Supply	Left Side to Supply	Distance b/t Supply Ducts	Supply Height	Supply Width	Top to Supply	Right Side to Supply	Distance b/t Supply Ducts	Water Out	Bottom to Condensate Drain	Water In			R/A Duct Flange Height	Filter Rack Height			
151	52.50	32.00	70.00	22.00	20.00	24.00	5.00	17.50	-	17.50	28.00	2.00	12.12	-	17.00	10.50	3.00	44.25	-	48.00	50.00	1 1/2"	3/4"	24 x 24 (4)
181	52.50	32.00	70.00	22.00	20.00	24.00	5.00	17.50	-	17.50	28.00	2.00	12.12	-	17.00	10.50	3.00	44.25	-	48.00	50.00	1 1/2"	3/4"	24 x 24 (4)

All dimensions in inches unless otherwise noted.
All dimensions within +– 0.125".
Specifications subject to change without notice.

Bosch Thermotechnology Corp. reserves the right to make changes without notice due to continuing engineering and technological advances | BTC 761008103 H | 09.2026

Vertical Unit Configurations & Dimensions - EC210-360 Model

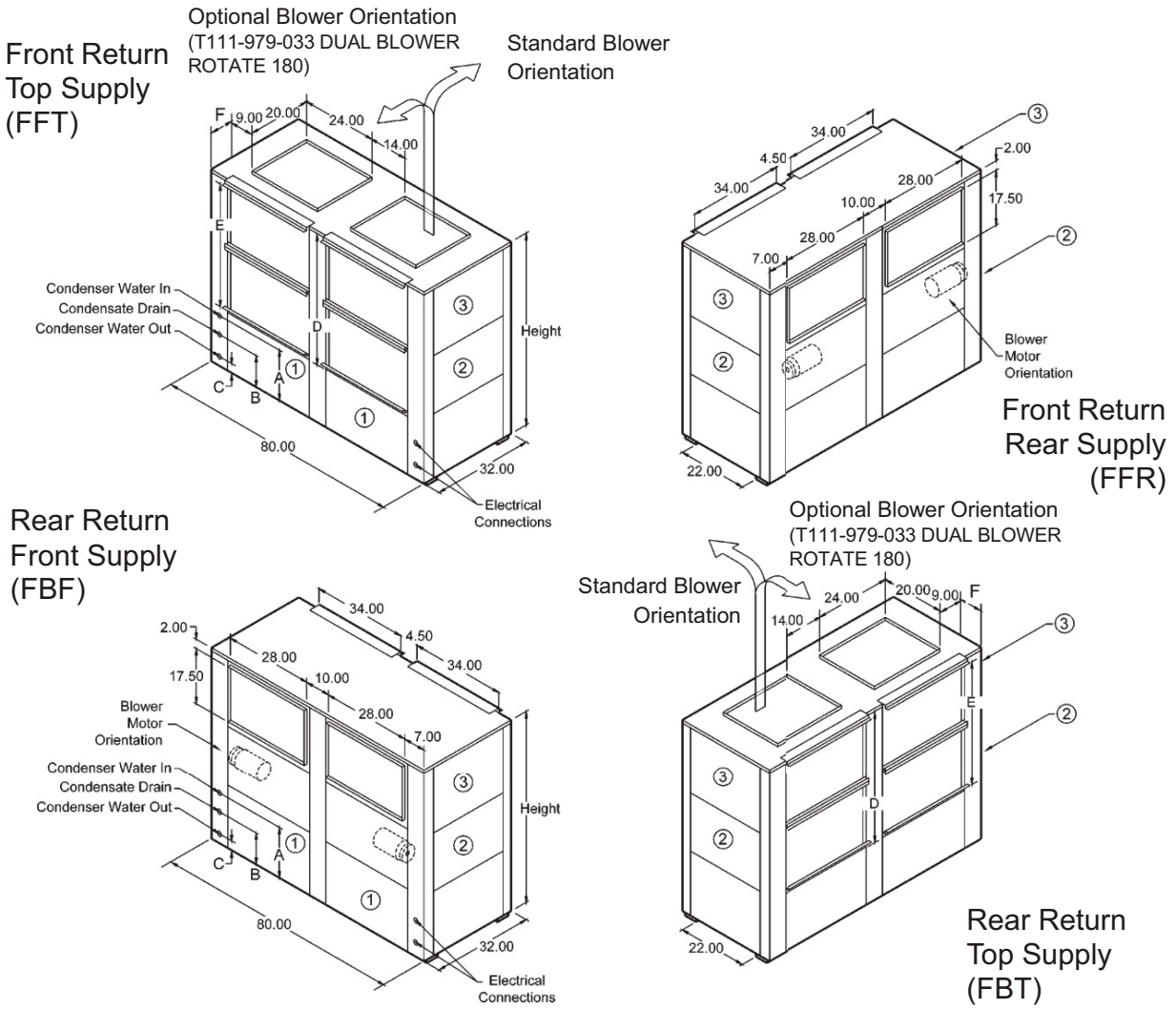

Vertical Unit Dimensions - EC210-360 Model

Model Number	Width	Depth	Height	Distance Between Base Rails	Top Supply:					Rear Supply:					A	B	C	R/A Duct Width	Distance Between R/A Ducts	D	E	Condenser Water Connections (FPT)	Condensate Drain Connection (FPT)	Recommended Replacement Nominal Filter Size - 1" thick
					Supply Depth	Supply Width	Front to Supply	Left Side to Supply	Distance b/t Supply Ducts	Supply Height	Supply Width	Top to Supply	Right Side to Supply	Distance b/t Supply Ducts	Water Out	Bottom to Condensate Drain	Water In			R/A Duct Flange Height	Filter Rack Height			
210	80.00	32.00	62.00	22.00	20.00	24.00	6.00	9.00	14.00	17.50	28.00	2.00	7.00	10.00	17.50	8.75	2.75	34.00	4.50	40.00	38.00	2"	1 1/4"	20 x 34.5 (4)
240	80.00	32.00	66.50	22.00	20.00	24.00	6.00	9.00	14.00	17.50	28.00	2.00	7.00	10.00	18.88	8.75	2.75	34.00	4.50	40.00	38.00	2"	1 1/4"	20 x 34.5 (4)
300	80.00	32.00	66.50	22.00	20.00	24.00	6.00	9.00	14.00	17.50	28.00	2.00	7.00	10.00	18.88	8.75	2.75	34.00	4.50	40.00	38.00	2"	1 1/4"	20 x 34.5 (4)
360	80.00	32.00	86.50	22.00	20.00	24.00	6.00	9.00	14.00	17.50	28.00	2.00	7.00	10.00	17.00	8.75	2.75	34.00	4.50	60.00	58.00	2"	1 1/4"	30 x 34.5 (4)

All dimensions in inches unless otherwise noted.
All dimensions within +– 0.125".
Specifications subject to change without notice.

Bosch Thermotechnology Corp.
Londonderry, NH • Watertown, MA • Ft. Lauderdale, FL

Bosch Thermotechnology Corp. reserves the right to make changes without notice due to continuing engineering and technological advances | BTC 761008103 H | 09.2026

Tel: 1-800-283-3787 | www.bosch-homecomfort.us

Vertical Unit Configurations & Dimensions with Take-Apart Construction - EC072-181 Model

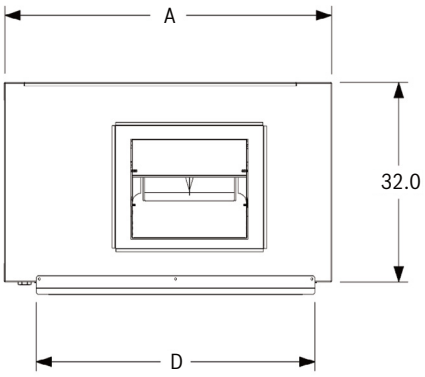

TOP VIEW

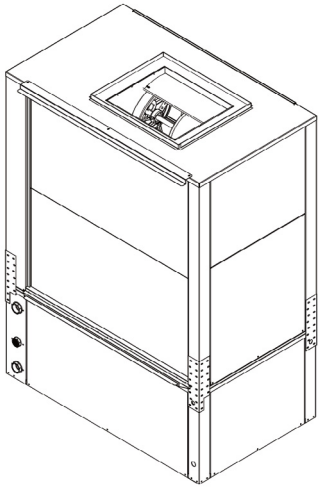

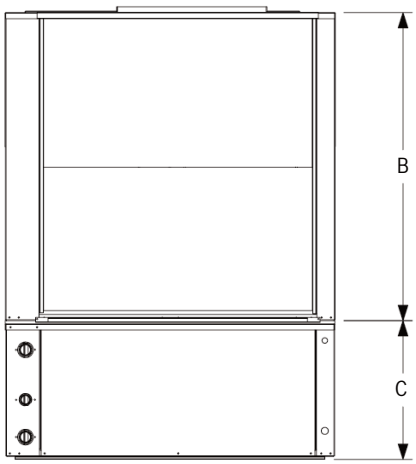

FRONT VIEW

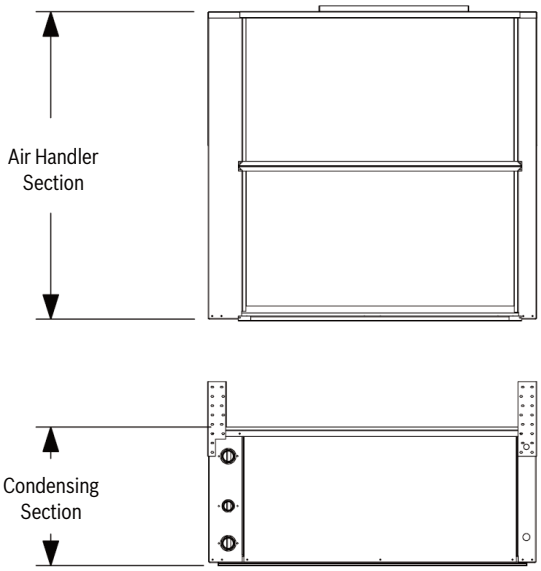

SPLIT VIEW

Vertical Unit Take-Apart Dimensions - EC072-181 Model

Model Number	Depth	Width	Height		Supply Width	Weight (lbs)	
		A	B	C	D	Air Handler	Condensing Section
072	32.00	42.00	42.00	22.00	33.00	204	396
096	32.00	42.00	42.00	22.00	33.00	242	468
120	32.00	42.00	42.00	22.00	33.00	264	511
151	32.00	52.50	50.00	22.00	45.00	330	640
181	32.00	52.50	50.00	22.00	45.00	360	700

All dimensions in inches unless otherwise noted.
All dimensions within +– 0.125".
Specifications subject to change without notice.

Bosch Thermotechnology Corp.
Londonderry, NH • Watertown, MA • Ft. Lauderdale, FL

Bosch Thermotechnology Corp. reserves the right to make changes without notice due to continuing engineering and technological advances | BTC 761008103 H | 09.2026

Tel: 1-800-283-3787 | www.bosch-homecomfort.us

Vertical Unit Configurations & Dimensions with Take-Apart Construction - EC210-360 Model

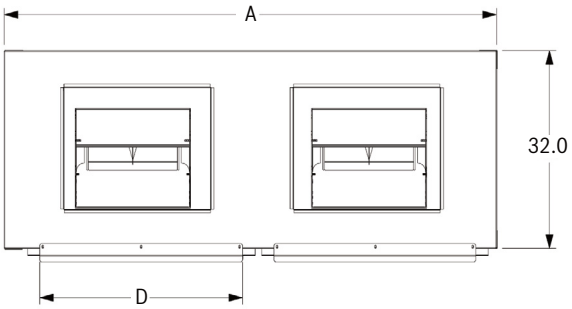

TOP VIEW

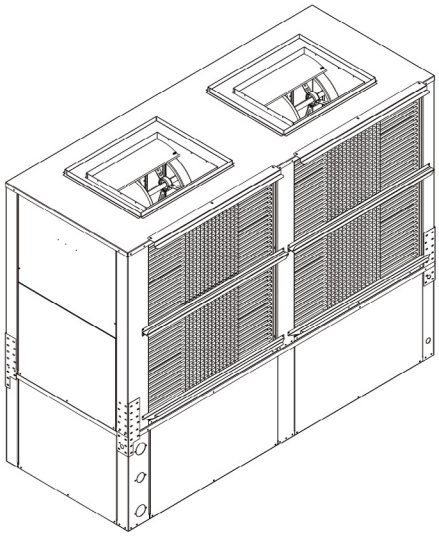

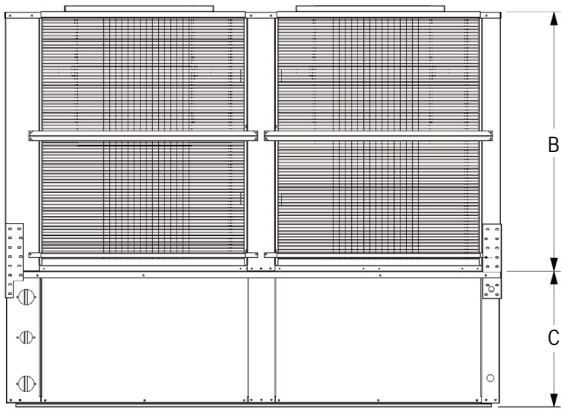

FRONT VIEW

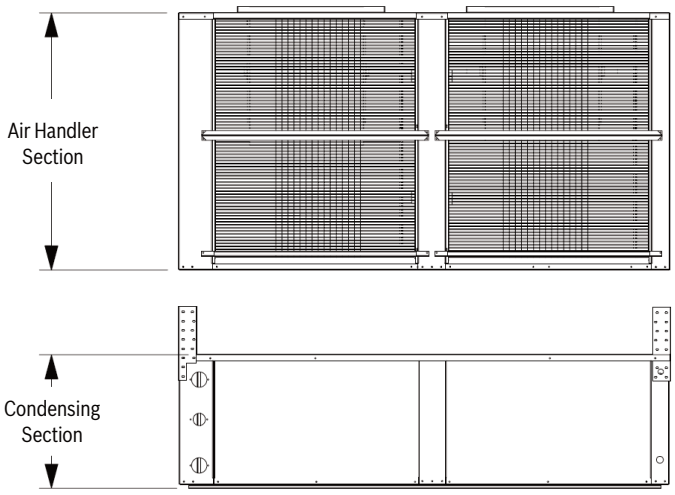

SPLIT VIEW

Vertical Unit Take-Apart Dimensions - EC210-360 Model

Model Number	Depth	Width	Height		Supply Width	Weight (lbs)	
		A	B	C	D	Air Handler	Condensing Section
210	32.00	80.00	42.00	22.00	33.00	408	792
240	32.00	80.00	42.00	26.00	33.00	460	890
300	32.00	80.00	42.00	26.00	33.00	500	970
360	32.00	80.00	62.00	27.00	33.00	595	1155

All dimensions in inches unless otherwise noted.
All dimensions within +– 0.125".
Specifications subject to change without notice.

Bosch Thermotechnology Corp. reserves the right to make changes without notice due to continuing engineering and technological advances | BTC 761008103 H | 09.2026

Horizontal Unit Configurations & Dimensions - EC072-150 Model

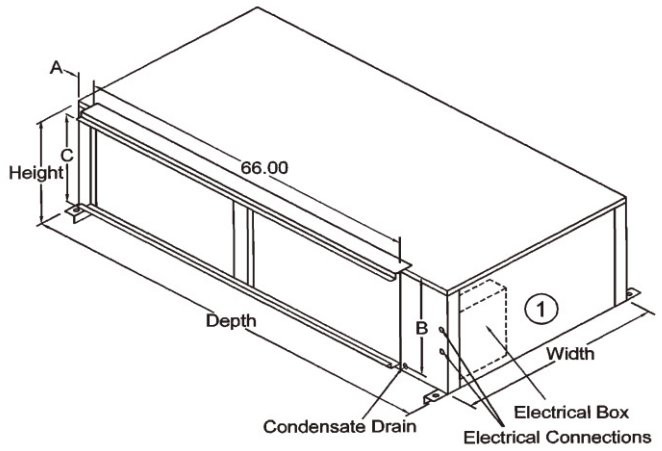

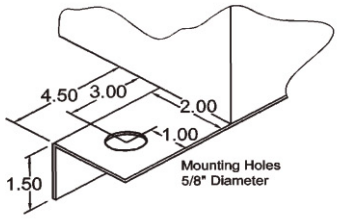

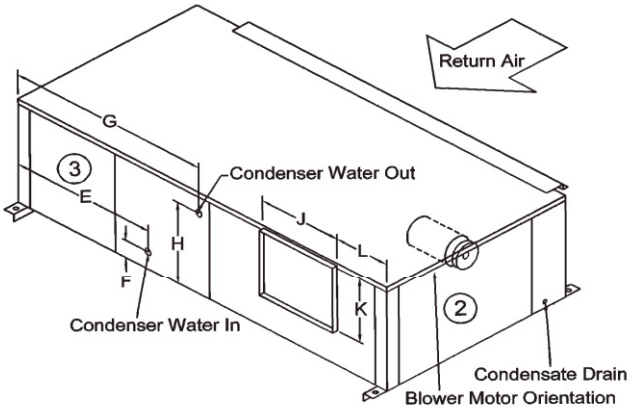

072, 096 & 150 (-SLS Only)

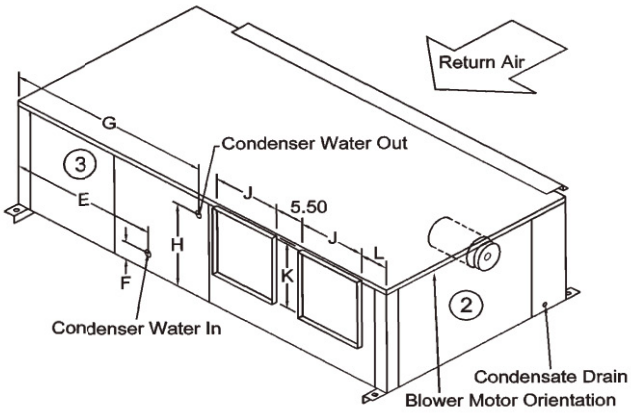

120 (-SLS Only)

Horizontal Unit Dimensions - EC072-150 Model

Model Number	Width	Depth	Height	A Cab End to Filter Rack	B Filter Rack Height	C R/A Duct Flange Height	R/A Duct Width	E Front to Water In	F Water In Height	G Front to Water Out	H Water Out Height	J Supply Width	K Supply Height	L Rear to Supply	M Distance b/t Supply Ducts	Condenser Water Connections (FPT)	Condensate Drain Connection (FPT)	Recommended Replacement Nominal Filter Size - 1" thick
072	38.00	78.00	21.50	2.00	20.50	18.50	66.00	28.00	3.50	28.00	14.50	15.25	13.50	10.50	5.50	1"	3/4"	20 x 34.5 (2)
096	38.00	78.00	21.50	2.00	20.50	18.50	66.00	28.00	3.50	28.00	19.25	15.50	13.50	10.50	5.50	1"	3/4"	20 x 34.5 (2)
120	38.00	78.00	21.50	2.00	20.50	18.50	66.00	27.00	3.00	27.00	16.75	15.25	13.50	5.25	5.50	1 1/4"	3/4"	20 x 34.5 (2)
150	42.00	82.00	25.50	2.00	20.50	18.50	66.00	24.00	3.25	24.00	17.75	17.50	16.00	14.00	5.50	1 1/2"	3/4"	24 x 34 (2)

All dimensions in inches unless otherwise noted.
All dimensions within +– 0.125".
Specifications subject to change without notice.

Bosch Thermotechnology Corp.
Londonderry, NH • Watertown, MA • Ft. Lauderdale, FL

Bosch Thermotechnology Corp. reserves the right to make changes without notice due to continuing engineering and technological advances | BTC 761008103 H | 09.2026

Tel: 1-800-283-3787 | www.bosch-homecomfort.us

Horizontal Unit Configurations & Dimensions - EC180-242 Model

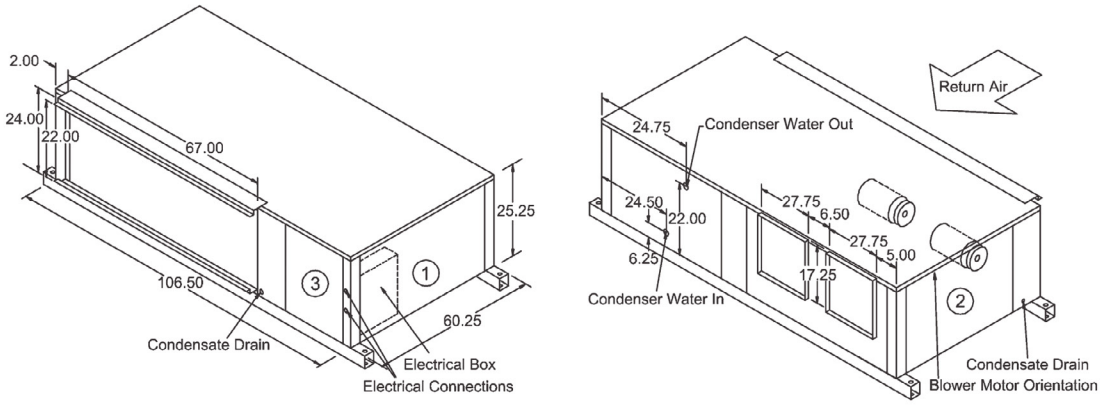

EC180 SLS CONFIGURATION ONLY

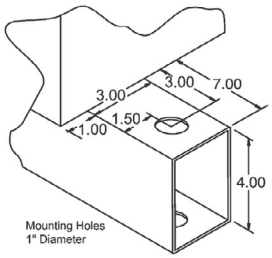

MOUNTING BRACKET SECTION VIEW

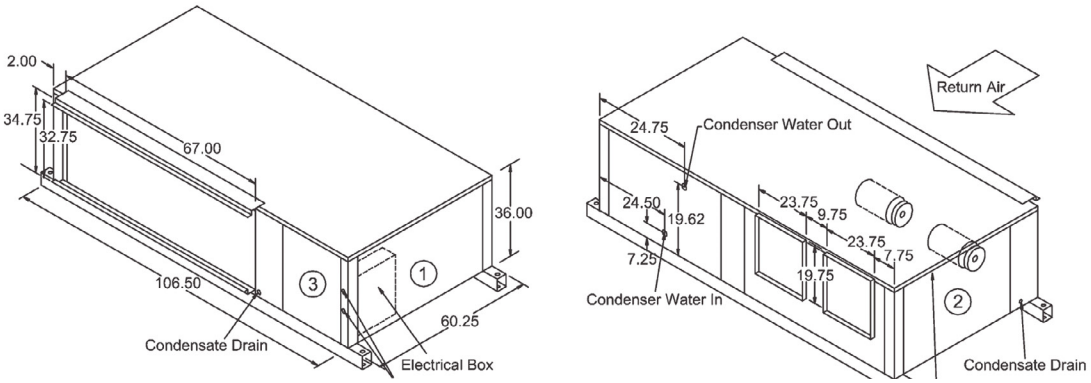

EC242 SLS CONFIGURATION ONLY

Horizontal Unit Dimensions - EC180-242 Model

Model Number	Width	Depth	Height	A Cab End to Filter Rack	B Filter Rack Height	C R/A Duct Flange Height	R/A Duct Width	E Front to Water In	F Water In Height	G Front to Water Out	H Water Out Height	J Supply Width	K Supply Height	L Rear to Supply	M Distance b/t Supply Ducts	Condenser Water Connections (FPT)	Condensate Drain Connection (FPT)	Recommended Replacement Nominal Filter Size - 1" thick
180	60.25	106.50	25.25	2.00	24.00	22.00	67.00	22.00	7.25	22.00	16.00	27.75	17.25	5.00	4.00	1 1/2"	1 1/4"	24 x 34 (2)
242	60.25	106.50	36.00	2.00	34.75	32.75	67.00	24.50	7.25	24.50	19.62	23.75	19.75	7.75	9.75	2"	1 1/4"	17.25 x 34.5 (4)

All dimensions in inches unless otherwise noted.
All dimensions within +– 0.125".
Specifications subject to change without notice.

Bosch Thermotechnology Corp. reserves the right to make changes without notice due to continuing engineering and technological advances | BTC 761008103 H | 09.2026

Operating Limits				
Fluid Type	**Limit**		**Cooling**	**Heating**
Air	Minimum ambient air		50°F	40°F
	Maximum ambient air		100°F	85°F
	Rated ambient air		80°F	68°F
	Minimum Air coil entering air db/wb		65/57°F	45°F
	Maximum Air Coil entering air db/wb		95/85°F	80°F
	Rated Air coil entering air db/wb		80/67°F	68/59°F
Fluid	Antifreeze Protection Required LWT / EWT		-	< 40/< 50°F
	Minimum water coil entering fluid		45°F	50/20*°F
	Maximum water coil entering fluid		110°F	80°F
	Rated water coil entering fluid	Water Loop application	86°F	68°F
		Ground Loop application	77°F	32°F
		Ground Water application	59°F	50°F
	Maximum operating water pressure	Standard unit	400psi/2,758kPA	
		With factory installed water valve option	300psi/2,068kPA	
	Minimum operating water flow rate		1.5 GPM per ton	

* Extended range application option required.

Bosch Thermotechnology Corp. reserves the right to make changes without notice due to continuing engineering and technological advances | BTC 761008103 H | 09.2026

Antifreeze Correction							
Antifreeze Type	Antifreeze Volume %	Cooling			Heating		WPD Correction Factor EWT 30 °F
		EWT 90 Deg.F			EWT 30 Deg. F		
		Total Cap.	Sens. Cap	Power	Htg. Cap	Power	
Water	0	1.000	1.000	1.000	1.000	1.000	1.000
Propylene Glycol	5	0.998	0.998	1.004	0.995	0.999	1.085
	10	0.996	0.995	1.008	0.989	0.997	1.165
	15	0.994	0.992	1.012	0.980	0.995	1.257
	25	0.989	0.983	1.023	0.962	0.990	1.491
	35	0.981	0.972	1.040	0.938	0.984	1.812
	40	0.976	0.965	1.050	0.923	0.981	2.012
	45	0.970	0.956	1.062	0.907	0.977	2.240
	50	0.964	0.948	1.076	0.890	0.972	2.502
Methanol	5	0.997	0.997	1.003	0.990	0.997	1.060
	10	0.996	0.996	1.005	0.979	0.993	1.100
	15	0.994	0.994	1.008	0.970	0.990	1.140
Ethanol	5	0.998	0.998	1.002	0.981	0.994	1.160
	10	0.996	0.996	1.004	0.960	0.988	1.230
	15	0.992	0.992	1.006	0.944	0.983	1.280
	25	0.986	0.986	1.009	0.917	0.974	1.400
Ethylene Glycol	5	0.999	0.999	1.002	0.997	0.999	1.035
	10	0.998	0.996	1.005	0.993	0.998	1.086
	15	0.996	0.994	1.009	0.986	0.996	1.145
	25	0.992	0.988	1.018	0.974	0.993	1.278
	30	0.989	0.984	1.023	0.967	0.992	1.354
	35	0.986	0.979	1.029	0.960	0.990	1.436
	40	0.983	0.974	1.036	0.953	0.988	1.528
	45	0.979	0.969	1.044	0.944	0.986	1.629
	50	0.975	0.962	1.053	0.934	0.983	1.743

Bosch Thermotechnology Corp. reserves the right to make changes without notice due to continuing engineering and technological advances | BTC 761008103 H | 09.2026

Waterside Pressure Drop			
Model Number	**Water Flow Rate (GPM)**	**Water Side Pressure Drop (PSIG)**	**Water Side Pressure Drop (ft of H2O)**
072	10	2.6	6.0
	12	3.6	8.3
	14	4.8	11.0
	16	6.1	14.0
	18	7.5	17.3
096	12	2.5	5.7
	14	3.3	7.5
	18	5.1	11.8
	21	6.8	15.6
	24	8.6	19.8
120	16	2.1	4.9
	20	3.1	7.3
	24	4.4	10.1
	28	5.8	13.3
	32	7.3	16.9
150/151	20	1.4	3.3
	25	2.1	4.9
	30	3.0	6.8
	35	3.9	9.0
	50	7.4	17.1
180/181	22	1.7	3.9
	27	2.5	5.7
	32	3.3	7.7
	42	5.4	12.5
	52	8.0	18.4
210	30	2.6	5.9
	40	4.3	9.9
	50	6.4	14.9
	60	8.9	20.6
	70	11.8	27.2
240/242	30	1.6	3.7
	40	2.7	6.2
	50	4.0	9.3
	60	5.6	12.9
	75	8.3	19.2
300	40	2.7	6.2
	50	4.0	9.3
	60	5.6	12.9
	75	8.3	19.2
	85	10.4	24.1
360	50	3.7	8.5
	70	6.7	15.5
	80	8.5	19.7
	90	10.6	24.4
	100	12.8	29.5

- All values based on pure water at EWT 70°F.

Bosch Thermotechnology Corp. reserves the right to make changes without notice due to continuing engineering and technological advances | BTC 761008103 H | 09.2026

Electrical Data - Belt Drive Motor - EC072-151 Models

Model Number	Voltage Code	Voltage/ Hz/ Phase	Voltage Min/Max	Compressor			Motor			Total Unit w/ Belt Drive Motor		
				Qty	RLA	LRA	Qty	HP	FLA	Min. Circuit Amps	MOP Calc	Max Fuse/ HACR
072	1	208-230/1/60	197/253	2	16.7	93.5	1	1.0	7.0	44.6	61.3	60
				2	16.7	93.5	1	1.5	8.5	46.1	62.8	60
				2	16.7	93.5	1	2.0	9.8	47.4	64.1	60
	3	208-230/3/60	197/253	2	12.2	97.5	1	1.0	3.6	31.1	43.3	40
				2	12.2	97.5	1	1.5	4.8	32.3	44.5	40
				2	12.2	97.5	1	2.0	6.2	33.7	45.9	45
				2	12.2	97.5	1	3.0	8.0	35.5	47.7	45
	4	460/3/60	414/506	2	5.8	44.3	1	1.0	1.8	14.9	20.7	20
				2	5.8	44.3	1	1.5	2.4	15.5	21.3	20
				2	5.8	44.3	1	2.0	3.1	16.2	22.0	20
				2	5.8	44.3	1	3.0	3.9	17.0	22.8	20
096	1	208-230/1/60	197/253	2	22.4	126.0	1	1.5	8.5	58.9	81.3	80
				2	22.4	126.0	1	2.0	9.8	60.2	82.6	80
	3	208-230/3/60	197/253	2	12.8	120.4	1	1.5	4.8	33.6	46.4	45
				2	12.8	120.4	1	2.0	6.2	35.0	47.8	45
				2	12.8	120.4	1	3.0	8.0	36.8	49.6	45
	4	460/3/60	414/506	2	6.0	49.4	1	1.5	2.4	15.9	21.9	20
				2	6.0	49.4	1	2.0	3.1	16.6	22.6	20
				2	6.0	49.4	1	3.0	3.9	17.4	23.4	20
	5	575/3/60	518/632	2	5.7	41.0	1	1.5	2.0	14.8	20.5	20
				2	5.7	41.0	1	2.0	2.6	15.4	21.1	20
				2	5.7	41.0	1	3.0	3.7	16.5	22.2	20
120 VT	1	208-230/1/60	197/253	2	25.6	126.0	1	2.0	9.8	67.4	93.0	90
	3	200-230/3/60	180/253	2	18.6	120.4	1	2.0	6.2	48.1	66.7	60
	4	460/3/60	414/506	2	8.3	49.4	1	2.0	3.1	21.8	30.1	30
	5	575/3/60	518/632	2	7.7	47.8	1	2.0	2.6	19.9	27.6	25
120 VT + HZ	3	208-230/3/60	197/253	2	18.6	155.0	1	3.0	8.0	49.9	68.5	60
				2	18.6	155.0	1	5.0	13.4	55.3	73.9	70
	4	460/3/60	414/506	2	8.3	58.1	1	3.0	3.9	22.6	30.9	30
				2	8.3	58.1	1	5.0	6.6	25.3	33.6	30
	5	575/3/60	518/632	2	7.7	47.8	1	3.0	3.7	21.0	28.7	25
				2	7.7	47.8	1	5.0	5.4	22.7	30.4	30
150	3	208-230/3/60	197/253	2	19.2	156.5	1	3.0	9.2	52.4	71.6	70
				2	19.2	156.5	1	5.0	13.4	56.6	75.8	70
	4	460/3/60	414/506	2	9.0	74.8	1	3.0	4.3	24.6	33.6	30
				2	9.0	74.8	1	5.0	6.6	26.9	35.9	35
	5	575/3/60	518/632	2	7.7	47.8	1	3.0	3.7	21.0	28.7	25
				2	7.7	47.8	1	5.0	5.4	22.7	30.4	30
151	3	208-230/3/60	197/253	2	19.2	156.5	1	3.0	8.0	51.2	70.4	70
				2	19.2	156.5	1	5.0	13.4	56.6	75.8	70
	4	460/3/60	414/506	2	9.0	74.8	1	3.0	3.9	24.2	33.2	30
				2	9.0	74.8	1	5.0	6.6	26.9	35.9	35
	5	575/3/60	518/632	2	7.7	47.8	1	3.0	3.7	21.0	28.7	25
				2	7.7	47.8	1	5.0	5.4	22.7	30.4	30

Bosch Thermotechnology Corp. reserves the right to make changes without notice due to continuing engineering and technological advances | BTC 761008103 H | 09.2026

Electrical Data - Belt Drive Motor - EC180-360 Models

"Model Number"	Voltage Code	Voltage/ Hz/ Phase	Voltage Min/Max	Compressor			Motor			Total Unit w/ Belt Drive Motor		
				Qty	RLA	LRA	Qty	HP	FLA	Min. Circuit Amps	MOP Calc	Max Fuse/ HACR
180	3	208-230/3/60	197/253	2	22.3	166.2	2	2.0	6.2	62.6	84.9	80
				2	22.3	166.2	2	3.0	8.0	66.2	88.5	80
				2	22.3	166.2	2	5.0	13.4	77.0	99.3	90
	4	460/3/60	414/506	2	8.8	74.6	2	2.0	3.1	26.0	34.8	30
				2	8.8	74.6	2	3.0	3.9	27.6	36.4	35
				2	8.8	74.6	2	5.0	6.6	33.0	41.8	40
	5	575/3/60	518/632	2	7.1	54.0	2	2.0	2.6	21.2	28.3	25
				2	7.1	54.0	2	3.0	3.7	23.4	30.5	30
				2	7.1	54.0	2	5.0	5.4	26.8	33.9	30
181	3	208-230/3/60	197/253	2	22.3	166.2	1	5.0	13.4	63.6	85.9	80
	4	460/3/60	414/506	2	8.8	74.6	1	5.0	6.6	26.4	35.2	35
	5	575/3/60	518/632	2	7.1	54.0	1	5.0	5.4	21.4	28.5	25
210	3	208-230/3/60	197/253	2	28.6	207.5	2	1.5	4.8	74.0	102.6	100
				2	28.6	207.5	2	2.0	6.2	76.8	105.4	100
				2	28.6	207.5	2	3.0	8.0	80.4	109.0	100
				2	28.6	207.5	2	5.0	13.4	91.2	119.8	110
	4	460/3/60	414/506	2	12.4	100.2	2	1.5	2.4	32.7	45.1	45
				2	12.4	100.2	2	2.0	3.1	34.1	46.5	45
				2	12.4	100.2	2	3.0	3.9	35.7	48.1	45
				2	12.4	100.2	2	5.0	6.6	41.1	53.5	50
	5	575/3/60	518/632	2	8.9	78.0	2	1.5	2.0	24.0	32.9	30
				2	8.9	78.0	2	2.0	2.6	25.2	34.1	30
				2	8.9	78.0	2	3.0	3.7	27.4	36.3	35
				2	8.9	78.0	2	5.0	5.4	30.8	39.7	35
240	3	208-230/3/60	197/253	2	28.5	255.0	2	2.0	6.2	76.5	105.0	100
				2	28.5	255.0	2	3.0	8.0	80.1	108.6	100
				2	28.5	255.0	2	5.0	13.4	90.9	119.4	110
	4	460/3/60	414/506	2	13.4	123.0	2	2.0	3.1	36.4	49.8	45
				2	13.4	123.0	2	3.0	3.9	38.0	51.4	50
				2	13.4	123.0	2	5.0	6.6	43.4	56.8	50
	5	575/3/60	518/632	2	10.7	93.7	2	2.0	2.6	29.3	40.0	35
				2	10.7	93.7	2	3.0	3.7	31.5	42.2	40
				2	10.7	93.7	2	5.0	5.4	34.9	45.6	45
242	3	208-230/3/60	197/253	2	28.5	255.0	2	2.0	3.9	71.9	100.4	100
				2	28.5	255.0	2	3.0	8.0	80.1	108.6	100
				2	28.5	255.0	2	5.0	13.4	90.9	119.4	110
	4	460/3/60	414/506	2	13.4	123.0	2	2.0	3.1	36.4	49.8	45
				2	13.4	123.0	2	3.0	3.9	38.0	51.4	50
				2	13.4	123.0	2	5.0	6.6	43.4	56.8	50
	5	575/3/60	518/632	2	10.7	93.7	2	2.0	2.6	29.3	40.0	35
				2	10.7	93.7	2	3.0	3.7	31.5	42.2	40
				2	10.7	93.7	2	5.0	5.4	34.9	45.6	45
300	3	208-230/3/60	197/253	2	40.7	270.0	2	3.0	8.0	107.6	148.3	125
				2	40.7	270.0	2	5.0	13.4	118.4	159.1	150
	4	460/3/60	414/506	2	19.4	147.0	2	3.0	3.9	51.5	70.9	70
				2	19.4	147.0	2	5.0	6.6	56.9	76.3	70
	5	575/3/60	518/632	2	13.7	109.0	2	3.0	3.7	38.2	51.9	50
				2	13.7	109.0	2	5.0	5.4	41.6	55.3	50
360	3	208-230/3/60	197/253	2	48.9	386.3	2	5.0	13.4	136.8	185.7	175
	4	460/3/60	414/506	2	23.9	182.0	2	5.0	6.6	67.0	90.9	90
	5	575/3/60	518/632	2	19.2	131.0	2	5.0	5.4	54.0	73.2	70

Bosch Thermotechnology Corp. reserves the right to make changes without notice due to continuing engineering and technological advances | BTC 761008103 H | 09.2026

Electrical Data - Belt Drive Motor, Inverter Duty - EC072-181 Models

Model Number	Voltage Code	Voltage/ Hz/ Phase	Voltage Min/Max	Compressor			Motor			Total Unit w/ Belt Drive Motor , Inverter		
				Qty	RLA	LRA	Qty	HP	FLA	Min. Circuit Amps	MOP Calc	Max Fuse/ HACR
072	3	208-230/3/60	197/253	2	12.2	97.5	1	2.0	6.2	33.7	45.9	45
				2	12.2	97.5	1	3.0	8.8	36.3	48.5	45
	4	460/3/60	414/506	2	5.8	44.3	1	2.0	3.1	16.2	22.0	20
				2	5.8	44.3	1	3.0	4.3	17.4	23.2	20
96	3	208-230/3/60	197/253	2	12.8	120.4	1	2.0	6.2	35.0	47.8	45
				2	12.8	120.4	1	3.0	8.8	37.6	50.4	50
	4	460/3/60	414/506	2	6.0	49.4	1	2.0	3.1	16.6	22.6	20
				2	6.0	49.4	1	3.0	4.3	17.8	23.8	20
	5	575/3/60	518/632	2	5.7	41.0	1	2.0	2.0	14.8	20.5	20
				2	5.7	41.0	1	3.0	3.5	16.3	22.0	20
120 VT	3	208-230/3/60	197/253	2	18.6	155.0	1	2.0	6.2	48.1	66.7	60
	4	460/3/60	414/506	2	8.3	58.1	1	2.0	3.1	21.8	30.1	30
	5	575/3/60	518/632	2	7.7	47.8	1	2.0	2.0	19.3	27.0	25
120 VT + HZ	3	208-230/3/60	197/253	2	18.6	155.0	1	3.0	8.8	50.7	69.3	60
				2	18.6	155.0	1	5.0	13.5	55.4	74.0	70
	4	460/3/60	414/506	2	8.3	58.1	1	3.0	4.3	23.0	31.3	30
				2	8.3	58.1	1	5.0	6.2	24.9	33.2	30
	5	575/3/60	518/632	2	7.7	47.8	1	3.0	3.5	20.8	28.5	25
				2	7.7	47.8	1	5.0	4.5	21.8	29.5	25
150	3	208-230/3/60	197/253	2	19.2	156.5	1	3.0	8.8	52.0	71.2	70
				2	19.2	156.5	1	5.0	13.5	56.7	75.9	70
	4	460/3/60	414/506	2	9.0	74.8	1	3.0	4.3	24.6	33.6	30
				2	9.0	74.8	1	5.0	6.2	26.5	35.5	35
	5	575/3/60	518/632	2	7.7	47.8	1	3.0	3.5	20.8	28.5	25
				2	7.7	47.8	1	5.0	4.5	21.8	29.5	25
151	3	208-230/3/60	197/253	2	19.2	156.5	1	3.0	8.8	52.0	71.2	70
				2	19.2	156.5	1	5.0	13.5	56.7	75.9	70
	4	460/3/60	414/506	2	9.0	74.8	1	3.0	4.3	24.6	33.6	30
				2	9.0	74.8	1	5.0	6.2	26.5	35.5	35
	5	575/3/60	518/632	2	7.7	47.8	1	3.0	3.5	20.8	28.5	25
				2	7.7	47.8	1	5.0	4.5	21.8	29.5	25
180	3	208-230/3/60	197/253	2	22.3	166.2	2	2.0	6.2	62.6	84.9	80
				2	22.3	166.2	2	3.0	8.8	67.8	90.1	90
				2	22.3	166.2	2	5.0	13.5	77.2	99.5	90
	4	460/3/60	414/506	2	8.8	74.6	2	2.0	3.1	26.0	34.8	30
				2	8.8	74.6	2	3.0	4.3	28.4	37.2	35
				2	8.8	74.6	2	5.0	6.2	32.2	41.0	40
	5	575/3/60	518/632	2	7.1	54.0	2	2.0	2.0	20.0	27.1	25
				2	7.1	54.0	2	3.0	3.5	22.9	30.0	25
				2	7.1	54.0	2	5.0	4.5	25.0	32.1	30
181	3	200-230/3/60	180/253	2	22.3	166.2	1	5.0	13.5	63.7	86.0	80
	4	460/3/60	414/506	2	8.8	74.6	1	5.0	6.2	26.0	34.8	30
	5	575/3/60	518/632	2	7.1	54.0	1	5.0	4.5	20.5	27.6	25

Bosch Thermotechnology Corp. reserves the right to make changes without notice due to continuing engineering and technological advances | BTC 761008103 H | 09.2026

Electrical Data - Belt Drive Motor, Inverter Duty - EC210-360 Models

Model Number	Voltage Code	Voltage/ Hz/ Phase	Voltage Min/Max	Compressor			Motor			Total Unit w/ Belt Drive Motor		
				Qty	RLA	LRA	Qty	HP	FLA	Min. Circuit Amps	MOP Calc	Max Fuse/ HACR
210	3	208-230/3/60	197/253	2	28.6	207.5	2	2.0	6.2	76.8	105.4	100
				2	28.6	207.5	2	3.0	8.8	82.0	110.6	110
				2	28.6	207.5	2	5.0	13.5	91.4	120.0	110
	4	460/3/60	414/506	2	12.4	100.2	2	2.0	3.1	34.1	46.5	45
				2	12.4	100.2	2	3.0	4.3	36.5	48.9	45
				2	12.4	100.2	2	5.0	6.2	40.3	52.7	50
	5	575/3/60	518/632	2	8.9	78.0	2	2.0	2.0	24.0	32.9	30
				2	8.9	78.0	2	3.0	3.5	26.9	35.8	35
				2	8.9	78.0	2	5.0	4.5	29.0	37.9	35
240	3	208-230/3/60	197/253	2	28.5	255.0	2	2.0	6.2	76.5	105.0	100
				2	28.5	255.0	2	3.0	8.8	81.7	110.2	110
				2	28.5	255.0	2	5.0	13.5	91.1	119.6	110
	4	460/3/60	414/506	2	13.4	123.0	2	2.0	3.1	36.4	49.8	45
				2	13.4	123.0	2	3.0	4.3	38.8	52.2	50
				2	13.4	123.0	2	5.0	6.2	42.6	56.0	50
	5	575/3/60	518/632	2	10.7	93.7	2	2.0	2.0	28.1	38.8	35
				2	10.7	93.7	2	3.0	3.5	31.0	41.7	40
				2	10.7	93.7	2	5.0	4.5	33.1	43.8	40
242	3	208-230/3/60	197/253	2	28.5	255.0	2	2.0	6.2	76.5	105.0	100
				2	28.5	255.0	2	3.0	8.8	81.7	110.2	110
				2	28.5	255.0	2	5.0	13.5	91.1	119.6	110
	4	460/3/60	414/506	2	13.4	123.0	2	2.0	3.1	36.4	49.8	45
				2	13.4	123.0	2	3.0	4.3	38.8	52.2	50
				2	13.4	123.0	2	5.0	6.2	42.6	56.0	50
	5	575/3/60	518/632	2	10.7	93.7	2	2.0	2.0	28.1	38.8	35
				2	10.7	93.7	2	3.0	3.5	31.0	41.7	40
				2	10.7	93.7	2	5.0	4.5	33.1	43.8	40
300	3	208-230/3/60	197/253	2	40.7	270.0	2	3.0	8.8	109.2	149.9	125
				2	40.7	270.0	2	5.0	13.5	118.6	159.3	150
	4	460/3/60	414/506	2	19.4	147.0	2	3.0	4.3	52.3	71.7	70
				2	19.4	147.0	2	5.0	6.2	56.1	75.5	70
	5	575/3/60	518/632	2	13.7	109.0	2	3.0	3.5	37.7	51.4	50
				2	13.7	109.0	2	5.0	4.5	39.8	53.5	50
360	3	200-230/3/60	180/253	2	48.9	386.3	2	5.0	13.5	137.0	185.9	175
	4	460/3/60	414/506	2	23.9	182.0	2	5.0	6.2	66.2	90.1	90
	5	575/3/60	518/632	2	19.2	131.0	2	5.0	4.5	52.2	71.4	70

Bosch Thermotechnology Corp. reserves the right to make changes without notice due to continuing engineering and technological advances | BTC 761008103 H | 09.2026

Electrical Data - Inverter Drive, Inverter Duty - EC072-181 Models

Model Number	Voltage Code	Voltage/ Hz/ Phase	Voltage Min/Max	Compressor			Motor			Total Unit w/ Belt Drive Motor		
				Qty	RLA	LRA	Qty	HP	FLA	Min. Circuit Amps	MOP Calc	Max Fuse/ HACR
072	3	208-230/3/60	197/253	2	12.2	97.5	1	2.0	10.6	38.1	50.3	50
				2	12.2	97.5	1	3.0	10.6	38.1	50.3	50
	4	460/3/60	414/506	2	5.8	44.3	1	2.0	4.8	17.9	23.7	20
				2	5.8	44.3	1	3.0	4.8	17.9	23.7	20
96	3	208-230/3/60	197/253	2	12.8	120.4	1	2.0	10.6	39.4	52.2	50
				2	12.8	120.4	1	3.0	10.6	39.4	52.2	50
	4	460/3/60	414/506	2	6.0	49.4	1	2.0	4.8	18.3	24.3	20
				2	6.0	49.4	1	3.0	4.8	18.3	24.3	20
	5	575/3/60	518/632									
120 VT	3	208-230/3/60	197/253	2	18.6	155.0	1	2.0	10.6	52.5	71.1	70
	4	460/3/60	414/506	2	8.3	58.1	1	2.0	4.8	23.5	31.8	30
	5	575/3/60	518/632									
120 VT + HZ	3	208-230/3/60	197/253	2	18.6	155.0	1	3.0	10.6	52.5	71.1	70
				2	18.6	155.0	1	5.0	16.7	58.6	77.2	70
	4	460/3/60	414/506	2	8.3	58.1	1	3.0	4.8	23.5	31.8	30
				2	8.3	58.1	1	5.0	7.6	26.3	34.6	30
	5	575/3/60	518/632									
150	3	208-230/3/60	197/253	2	19.2	156.5	1	3.0	10.6	53.8	73.0	70
				2	19.2	156.5	1	5.0	16.7	59.9	79.1	70
	4	460/3/60	414/506	2	9.0	74.8	1	3.0	4.8	25.1	34.1	30
				2	9.0	74.8	1	5.0	7.6	27.9	36.9	35
	5	575/3/60	518/632									
151	3	208-230/3/60	197/253	2	19.2	156.5	1	3.0	10.6	53.8	73.0	70
				2	19.2	156.5	1	5.0	16.7	59.9	79.1	70
	4	460/3/60	414/506	2	9.0	74.8	1	3.0	4.8	25.1	34.1	30
				2	9.0	74.8	1	5.0	7.6	27.9	36.9	35
	5	575/3/60	518/632									
180	3	208-230/3/60	197/253	2	22.3	166.2	2	2.0	16.7	66.9	89.2	80
				2	22.3	166.2	2	3.0	24.2	74.9	99.1	90
				2	22.3	166.2	2	5.0	30.8	83.1	113.9	110
	4	460/3/60	414/506	2	8.8	74.6	2	2.0	7.6	27.4	36.2	35
				2	8.8	74.6	2	3.0	12.0	32.6	44.6	40
				2	8.8	74.6	2	5.0	14.0	35.1	49.1	45
	5	575/3/60	518/632									
181	3	200-230/3/60	180/253	2	22.3	166.2	1	5.0	16.7	66.9	89.2	80
	4	460/3/60	414/506	2	8.8	74.6	1	5.0	7.6	27.4	36.2	35
	5	575/3/60	518/632									

NOTES: Invert not allowed on 575V units. Only one inverter per unit.

Bosch Thermotechnology Corp. reserves the right to make changes without notice due to continuing engineering and technological advances | BTC 761008103 H | 09.2026

Electrical Data - Inverter Drive, Inverter Duty - EC210-360 Models

Model Number	Voltage Code	Voltage/ Hz/ Phase	Voltage Min/Max	Compressor			Motor			Total Unit w/ Belt Drive Motor		
				Qty	RLA	LRA	Qty	HP	FLA	Min. Circuit Amps	MOP Calc	Max Fuse/ HACR
210	3	208-230/3/60	197/253	2	28.6	207.5	2	2.0	16.7	81.1	109.7	100
				2	28.6	207.5	2	3.0	24.2	88.6	117.2	110
				2	28.6	207.5	2	5.0	30.8	95.7	126.5	125
	4	460/3/60	414/506	2	12.4	100.2	2	2.0	7.6	35.5	47.9	45
				2	12.4	100.2	2	3.0	12.0	39.9	52.3	50
				2	12.4	100.2	2	5.0	14.0	42.3	56.3	50
	5	575/3/60	518/632									
240	3	208-230/3/60	197/253	2	28.5	255.0	2	2.0	16.7	80.8	109.3	100
				2	28.5	255.0	2	3.0	24.2	88.3	116.8	110
				2	28.5	255.0	2	5.0	30.8	95.5	126.3	125
	4	460/3/60	414/506	2	13.4	123.0	2	2.0	7.6	37.8	51.2	50
				2	13.4	123.0	2	3.0	12.0	42.2	55.6	50
				2	13.4	123.0	2	5.0	14.0	44.3	58.3	50
	5	575/3/60	518/632									
242	3	208-230/3/60	197/253	2	28.5	255.0	2	2.0	16.7	80.8	109.3	100
				2	28.5	255.0	2	3.0	24.2	88.3	116.8	110
				2	28.5	255.0	2	5.0	30.8	95.5	126.3	125
	4	460/3/60	414/506	2	13.4	123.0	2	2.0	7.6	37.8	51.2	50
				2	13.4	123.0	2	3.0	12.0	42.2	55.6	50
				2	13.4	123.0	2	5.0	14.0	44.3	58.3	50
	5	575/3/60	518/632									
300	3	208-230/3/60	197/253	2	40.7	270.0	2	3.0	24.2	115.8	156.5	150
				2	40.7	270.0	2	5.0	30.8	122.4	163.1	150
	4	460/3/60	414/506	2	19.4	147.0	2	3.0	12.0	55.7	75.1	70
				2	19.4	147.0	2	5.0	14.0	57.7	77.1	70
	5	575/3/60	518/632									
360	3	200-230/3/60	180/253	2	48.9	386.3	2	5.0	24.2	134.2	183.1	175
	4	460/3/60	414/506	2	23.9	182.0	2	5.0	14.0	67.8	91.7	90
	5	575/3/60	518/632									

NOTES: Invert not allowed on 575V units. Only one inverter per unit.

Bosch Thermotechnology Corp.
Londonderry, NH • Watertown, MA • Ft. Lauderdale, FL

Bosch Thermotechnology Corp. reserves the right to make changes without notice due to continuing engineering and technological advances | BTC 761008103 H | 09.2026

Tel: 1-800-283-3787 | www.bosch-homecomfort.us

Blower Performance - EC072-151 Model

Model Number	CFM	External Static Pressure (in.wc Wet coil)															
		0.2		0.4		0.6		0.8		1		1.2		1.4		1.6	
		rpm	bhp	rpm	bhp	rpm	bhp	rpm	bhp	rpm	bhp	rpm	bhp	rpm	bhp	rpm	bhp
072	2000	606	0.35	693	0.43	774	0.52	850	0.62	-	-	-	-	-	-	-	-
	2500	706	0.61	780	0.72	850	0.82	916	0.93	979	1.04	1040	1.16	1098	1.28	-	-
	3000	814	1.00	877	1.12	938	1.24	996	1.37	1053	1.50	1107	1.63	1160	1.76	1211	1.90
	3500	923	1.52	979	1.66	1033	1.80	1085	1.94	1135	2.09	1184	2.24	1232	2.39	1279	2.54
	4000	1033	2.20	1083	2.36	1131	2.52	1178	2.68	-	-	-	-	-	-	-	-
096	2000	-	-	685	0.43	766	0.51	843	0.61	915	0.71	-	-	-	-	-	-
	2500	695	0.6	769	0.7	839	0.81	906	0.91	970	1.03	1031	1.14	1090	1.27	-	-
	3000	801	0.97	865	1.09	926	1.22	985	1.34	1042	1.47	1096	1.6	1149	1.74	1201	1.88
	3500	906	1.48	962	1.62	1017	1.76	1069	1.90	1120	2.05	1170	2.19	1218	2.34	1265	2.5
	4000	1016	2.14	1066	2.30	1115	2.46	1162	2.62	-	-	-	-	-	-	-	-
120	2500	-	-	-	-	625	0.58	692	0.70	-	-	-	-	-	-	-	-
	3000	-	-	-	-	661	0.80	723	0.94	780	1.08	835	1.22	-	-	-	-
	3500	-	-	650	0.97	709	1.11	765	1.26	818	1.41	869	1.57	918	1.74	965	1.9
	4000	648	1.16	704	1.32	758	1.49	809	1.65	858	1.82	905	1.99	951	2.17	995	2.35
	4500	709	1.59	760	1.77	810	1.95	857	2.13	902	2.32	946	2.51	989	2.7	1031	2.9
	5000	774	2.12	821	2.32	866	2.52	909	2.72	952	2.92	993	3.13	1033	3.34	1072	3.55
	5500	836	2.75	880	2.97	921	3.19	962	3.41	1002	3.63	1040	3.85	1078	4.08	1115	4.31
121	2500	-	-	679	0.48	770	0.61	854	0.75	-	-	-	-	-	-	-	-
	3000	639	0.54	729	0.68	811	0.82	889	0.97	962	1.13	1031	1.3	1097	1.48	-	-
	3500	713	0.8	793	0.95	867	1.11	938	1.28	1005	1.46	1069	1.64	1131	1.83	1191	2.03
	4000	784	1.12	856	1.29	924	1.47	989	1.66	1052	1.85	1111	2.05	1169	2.25	1225	2.46
	4500	857	1.51	923	1.71	985	1.91	1045	2.11	1103	2.32	1159	2.54	1213	2.76	1266	2.98
	5000	934	2.01	994	2.23	1052	2.45	1107	2.67	1161	2.9	1213	3.13	1264	3.37	1314	3.61
	5500	1009	2.60	1064	2.84	1118	3.08	1169	3.32	1220	3.56	1269	3.81	1317	4.07	1363	4.33
150	3500	-	-	617	0.89	677	1.03	735	1.18	789	1.33	841	1.48	891	1.64	939	1.81
	4000	606	1.05	665	1.21	721	1.37	773	1.53	824	1.70	872	1.87	919	2.05	964	2.23
	4500	663	1.44	717	1.62	768	1.80	817	1.98	864	2.16	909	2.35	953	2.54	995	2.73
	5000	722	1.92	771	2.11	818	2.31	864	2.51	907	2.71	950	2.91	991	3.12	1031	3.33
	5500	780	2.48	825	2.70	869	2.91	911	3.13	952	3.35	992	3.57	1031	3.79	1069	4.02
	6000	841	3.17	883	3.40	924	3.64	963	3.88	1002	4.11	1039	4.35	1076	4.59	1111	4.84
	6500	901	3.96	940	4.22	978	4.47	1015	4.73	1051	4.98	1087	5.24	1121	5.5	1155	5.76
151	3500	-	-	617	0.89	677	1.03	735	1.18	789	1.33	841	1.48	891	1.64	939	1.81
	4000	606	1.05	665	1.21	721	1.37	773	1.53	824	1.70	872	1.87	919	2.05	964	2.23
	4500	663	1.44	717	1.62	768	1.80	817	1.98	864	2.16	909	2.35	953	2.54	995	2.73
	5000	722	1.92	771	2.11	818	2.31	864	2.51	907	2.71	950	2.91	991	3.12	1031	3.33
	5500	780	2.48	825	2.70	869	2.91	911	3.13	952	3.35	992	3.57	1031	3.79	1069	4.02
	6000	841	3.17	883	3.40	924	3.64	963	3.88	1002	4.11	1039	4.35	1076	4.59	1111	4.84
	6500	901	3.96	940	4.22	978	4.47	1015	4.73	1051	4.98	1087	5.24	1121	5.5	1155	5.76

Indicates standard operating range. For values outside of this range please contact Applications Engineering.

NOTES: Standard filter 1" MERV5 included, bhp values showns are based on system requirement, not individual blower.

Bosch Thermotechnology Corp. reserves the right to make changes without notice due to continuing engineering and technological advances | BTC 761008103 H | 09.2026

Blower Performance - EC180-360 Model

Model Number	CFM	External Static Pressure (in.wc Wet coil)																			
		0.2		0.4		0.6		0.8		1		1.2		1.4		1.6		1.8		2	
		rpm	bhp	rpm	bhp	rpm	bhp	rpm	bhp	rpm	bhp	rpm	bhp	rpm	bhp	rpm	bhp	rpm	bhp	rpm	bhp
180	4500	655	1.41	709	1.59	760	1.77	810	1.95	857	2.13	902	2.32	946	2.51	989	2.7	1031	2.90	1071	3.1
	5000	712	1.88	762	2.07	809	2.27	855	2.47	899	2.67	941	2.87	983	3.08	1023	3.29	1062	3.5	1101	3.71
	5500	770	2.44	816	2.65	860	2.87	903	3.09	944	3.31	984	3.53	1023	3.75	1061	3.97	1098	4.2	1135	4.43
	6000	828	3.1	870	3.33	912	3.57	951	3.80	990	4.04	1028	4.28	1065	4.52	1101	4.76	1136	5.01	1171	5.25
	6500	889	3.89	928	4.14	967	4.40	1004	4.65	1041	4.91	1076	5.16	1111	5.42	1145	5.68	1179	5.94	1211	6.21
	7000	946	4.77	984	5.05	1020	5.32	1055	5.6	1090	5.87	1123	6.15	1156	6.43	1189	6.71	1221	6.99	1252	7.27
	7500	1005	5.80	1040	6.09	1074	6.39	1108	6.68	1140	6.98	1172	7.27	1204	7.57	1235	7.86	1265	8.16	1295	8.46
181	4500	669	0.97	748	1.16	822	1.35	892	1.56	959	1.77	1023	2.00	-	-	-	-	-	-	-	-
	5000	721	1.27	794	1.47	863	1.69	929	1.91	991	2.13	1052	2.37	1110	2.62	-	-	-	-	-	-
	5500	776	1.63	844	1.86	908	2.09	969	2.32	1028	2.57	1085	2.82	1141	3.08	1194	3.35	1246	3.62	-	-
	6000	830	2.05	893	2.30	953	2.55	1011	2.80	1066	3.06	1120	3.32	1173	3.60	1224	3.88	1274	4.17	1322	4.47
	6500	886	2.55	944	2.82	1001	3.08	1055	3.35	1108	3.63	1159	3.91	1209	4.20	1258	4.49	1305	4.8	1352	5.11
	7000	940	3.12	995	3.40	1048	3.69	1100	3.98	1150	4.27	1199	4.57	1246	4.87	1293	5.18	1338	5.5	1383	5.82
	7500	996	3.77	1048	4.08	1098	4.38	1147	4.69	1195	5.00	1241	5.31	1287	5.63	1331	5.96	1375	6.29	1417	6.63
210	5500	-	-	-	-	638	1.35	702	1.60	763	1.87	-	-	-	-	-	-	-	-	-	-
	6000	-	-	-	-	661	1.61	723	1.88	780	2.15	835	2.44	-	-	-	-	-	-	-	-
	6500	-	-	620	1.61	682	1.88	741	2.16	796	2.46	849	2.76	900	3.08	949	3.40	-	-	-	-
	7000	-	-	647	1.92	706	2.20	762	2.50	815	2.81	866	3.13	915	3.45	963	3.79	1008	4.14	-	-
	7500	612	1.94	672	2.24	728	2.55	782	2.86	833	3.18	882	3.51	929	3.85	975	4.20	1020	4.56	1063	4.94
	8000	642	2.30	699	2.61	753	2.94	804	3.27	853	3.61	901	3.95	947	4.31	991	4.67	1034	5.05	1076	5.43
	8500	672	2.69	726	3.03	777	3.37	827	3.72	874	4.07	920	4.43	964	4.80	1007	5.18	1049	5.57	1090	5.96
240	6500	-	-	633	1.67	694	1.94	752	2.22	807	2.52	860	2.82	910	3.14	-	-	-	-	-	-
	7000	601	1.70	663	1.99	721	2.28	776	2.58	828	2.89	879	3.21	927	3.54	974	3.88	1020	4.23	-	-
	7500	627	2.01	686	2.32	742	2.62	795	2.94	845	3.26	894	3.60	941	3.94	986	4.29	1031	4.66	1073	5.03
	8000	659	2.39	715	2.71	768	3.04	819	3.37	868	3.71	915	4.06	960	4.42	1004	4.78	1047	5.16	1088	5.55
	8500	691	2.81	744	3.15	795	3.49	844	3.84	890	4.20	936	4.56	980	4.94	1022	5.32	1063	5.71	1104	6.10
	9000	725	3.29	775	3.64	824	4.01	871	4.37	916	4.75	959	5.13	1002	5.52	1043	5.91	1083	6.32	1122	6.73
	9500	758	3.81	806	4.19	853	4.57	898	4.95	941	5.34	983	5.74	1024	6.15	1064	6.56	1103	6.98	1141	7.41
242	6500	630	1.65	691	1.92	749	2.21	804	2.50	857	2.81	907	3.12	975	3.61	1020	3.92	-	-	-	-
	7000	668	2.02	726	2.31	781	2.61	834	2.92	884	3.24	932	3.57	979	3.91	1024	4.27	-	-	-	-
	7500	703	2.41	758	2.72	810	3.04	860	3.36	908	3.70	955	4.05	1000	4.40	1044	4.77	1086	5.14	-	-
	8000	739	2.86	791	3.19	841	3.52	889	3.87	935	4.22	980	4.58	1023	4.95	1065	5.33	1107	5.72	1147	6.12
	8500	777	3.37	827	3.72	874	4.07	920	4.43	964	4.80	1007	5.18	1049	5.57	1090	5.96	1129	6.37	1168	6.78
	9000	814	3.93	861	4.30	907	4.67	951	5.05	993	5.44	1035	5.83	1075	6.24	1114	6.65	1153	7.07	1190	7.49
	9500	850	4.55	895	4.93	939	5.33	981	5.72	1022	6.13	1062	6.54	1101	6.96	1139	7.38	1176	7.82	1213	8.26
300	8500	782	3.40	832	3.75	879	4.11	925	4.47	969	4.84	1012	5.22	1053	5.61	1094	6.00	1133	6.41	1172	6.82
	9000	822	3.99	868	4.36	913	4.73	957	5.11	1000	5.50	1041	5.89	1081	6.30	1120	6.71	1158	7.13	1196	7.56
	9500	862	4.64	906	5.03	949	5.42	991	5.82	1032	6.23	1072	6.64	1110	7.06	1148	7.49	1185	7.93	1222	8.37
	10000	899	5.34	941	5.74	983	6.16	1023	6.57	1062	7.00	1101	7.43	1138	7.86	1175	8.31	1210	8.76	-	-
	10500	937	6.11	978	6.54	1018	6.97	1056	7.40	1094	7.84	1131	8.29	1167	8.75	-	-	-	-	-	-
	11000	978	6.99	1017	7.43	1055	7.88	1093	8.34	1129	8.80	-	-	-	-	-	-	-	-	-	-
	11500	1014	7.89	1052	8.35	1089	8.82	-	-	-	-	-	-	-	-	-	-	-	-	-	-
360	10500	740	4.28	788	4.69	834	5.11	878	5.52	920	5.94	962	6.36	1002	6.79	1041	7.23	1079	7.67	1116	8.11
	11000	768	4.86	814	5.29	858	5.72	901	6.15	942	6.59	982	7.03	1021	7.48	1059	7.93	1096	8.38	1133	8.84
	11500	798	5.50	842	5.95	885	6.40	926	6.86	966	7.31	1005	7.77	1043	8.23	1080	8.70	-	-	-	-
	12000	828	6.19	870	6.66	912	7.14	951	7.61	990	8.08	1028	8.56	-	-	-	-	-	-	-	-
	12500	857	6.94	898	7.43	938	7.92	977	8.41	1014	8.91	-	-	-	-	-	-	-	-	-	-
	13000	887	7.74	926	8.26	965	8.77	-	-	-	-	-	-	-	-	-	-	-	-	-	-
	13500	916	8.60	-	-	-	-	-	-	-	-	-	-	-	-	-	-	-	-	-	-

Indicates standard operating range. For values outside of this range please contact Applications Engineering.

NOTES: Standard filter 1" MERV5 included, bhp values showns are based on system requirement, not individual blower.

Bosch Thermotechnology Corp. reserves the right to make changes without notice due to continuing engineering and technological advances | BTC 761008103 H | 09.2026

Physical Data - EC072-181 Models															
Description	Unit	072		096		120		150		151		180		181	
		Cu	CuNi	Cu	CuNi	Cu	CuNi	Cu	CuNi	Cu	CuNi	Cu	CuNi	Cu	CuNi
Compressor Type	qty	Scroll (2)		Scroll (2)		Scroll (2)		Scroll (2)		Scroll (2)		Scroll (2)		Scroll (2)	
Max Water Working Pressure	psig/kPa	450/3100		450/3100		450/3100		450/3100		450/3100		450/3100		450/3100	
Number of Refrigeration Circuits	—	2		2		2		2		2		2		2	
Water Coil															
FPT	in	1.00		1.00		1.25		1.50		1.50		1.50		1.50	
Coaxial Coil Volume	gal	0.64		0.64		0.87		1.06		1.06		1.06		1.06	
Economizer coil															
FPT	in	2.00		2.00		2.00		2.00		2.00		2.00		2.00	
Vertical Cabinet															
Evaporator Coil Type	—	Tube-Fin		Tube-Fin		Tube-Fin		-		Tube-Fin		-		Tube-Fin	
Evaporator Dimensions (H x L)	in	20 x 32.5 (2)		20 x 32.5 (2)		20 x 32.5 (2)		-		24 x 43 (2)		-		24 x 43 (2)	
Evaporator Rows	—	3		3		3		-		3		-		3	
Standard Filter Size (H x L)	in	20 x 34.5 (2)		20 x 34.5 (2)		20 x 34.5 (2)		-		24 x 24 (4)		-		24 x 24 (4)	
Fan Motor Type/Speeds	—	Belt Drive/1		Belt Drive/1		Belt Drive/1		-		Belt Drive/1		-		Belt Drive/1	
Standard Fan Motor	hp	1		1.5		2		-		3		-		5	
Blower Wheel Size (Dia. x W x Qty)	in	12 x 12 x 1		12 x 12 x 1		15 x 15 x 1		-		15 x 15 x 1		-		15 x 15 x 1	
Refrigeration Charge (Circuit)	oz	68		77	74	77		-		99		-		113	
Refrigeration Charge (Total)	oz	136		154	148	154		-		198		-		226	
Weight - Operating	lbs	670		702		935		-		1,050		-		1,090	
Weight - Shipping	lbs	715		752		980		-		1,140		-		1,180	
Horizontal Cabinet															
Evaporator Coil Type	—	Tube-Fin		Tube-Fin		Tube-Fin		Tube-Fin		-		Tube-Fin		-	
Evaporator Dimensions (H x L)	in	20 x 32.5 (2)		20 x 32.5 (2)		20 x 32.5 (2)		24 x 65		-		24 x 65		-	
Evaporator Rows	—	3		3		3		3		-		3		-	
Standard Filter Size (H x L)	in	20 x 34.5 (2)		20 x 34.5 (2)		20 x 34.5 (2)		24 x 34 (2)		-		24 x 34 (2)		-	
Fan Motor Type/Speeds	—	Belt Drive/1		Belt Drive/1		Belt Drive/1		Belt Drive/1		-		Belt Drive/2		-	
Standard Fan Motor	hp	1		2		3		3		-		2		-	
Blower Wheel Size (Dia. x W x Qty)	in	12 x 12 x 1		12 x 12 x 1		12 x 9 x 2		15 x 15 x 1		-		12 x 12 x 2		-	
Refrigeration Charge (Circuit)	oz	70		83	74	77		104		-		117		-	
Refrigeration Charge (Total)	oz	140		166	148	154		208		-		234		-	
Weight - Operating	lbs	670		702		935		1,060		-		1,530		-	
Weight - Shipping	lbs	715		752		980		1,150		-		1,620		-	

Bosch Thermotechnology Corp. reserves the right to make changes without notice due to continuing engineering and technological advances | BTC 761008103 H | 09.2026

Physical Data - EC210-360 Models											
Description	Unit	210		240		242		300		360	
		Cu	CuNi	Cu	CuNi	Cu	CuNi	Cu	CuNi	Cu	CuNi
Compressor Type	qty	Scroll (2)		Scroll (2)		Scroll (2)		Scroll (2)		Scroll (2)	
Max Water Working Pressure	psig/kPa	450/3100		450/3100		450/3100		450/3100		450/3100	
Number of Refrigeration Circuits	—	2		2		2		2		2	
Water Coil											
FPT	in	2.00		2.00		2.00		2.00		2.00	
Coaxial Coil Volume	gal	3.04		3.40		3.40		3.40		3.31	
Economizer coil											
FPT	in	2.00		2.00		2.00		2.00		2.00	
Vertical Cabinet											
Evaporator Coil Type	—	Tube-Fin		Tube-Fin		-		Tube-Fin		Tube-Fin	
Evaporator Dimensions (H x L)	in	20 x 32.5 (4)		20 x 32.5 (4)		-		20 x 32.5 (4)		30 x 32.5 (2)	
Evaporator Rows	—	3		3		-		3		3	
Standard Filter Size (H x L)	in	20 x 34.5 (4)		20 x 34.5 (4)		-		20 x 34.5 (4)		30 x 34.5 (4)	
Fan Motor Type/Speeds	—	Belt Drive/2		Belt Drive/2		-		Belt Drive/2		Belt Drive/2	
Standard Fan Motor	hp	1.5		2		-		3		5	
Blower Wheel Size (Dia. x W x Qty)	in	15 x 15 x 2		15 x 15 x 2		-		15 x 15 x 2		15 x 15 x 2	
Refrigeration Charge (Circuit)	oz	141		146		-		146		247	
Refrigeration Charge (Total)	oz	282		292		-		292		494	
Weight - Operating	lbs	1,090		1,310		-		1,530		1,650	
Weight - Shipping	lbs	1,180		1,400		-		1,630		1,750	
Horizontal Cabinet											
Evaporator Coil Type	—	-		-		Tube-Fin		-		-	
Evaporator Dimensions (H x L)	in	-		-		34 x 65		-		-	
Evaporator Rows	—	-		-		3		-		-	
Standard Filter Size (H x L)	in	-		-		20 x 34.5 (4)		-		-	
Fan Motor Type/Speeds	—	-		-		Belt Drive/2		-		-	
Standard Fan Motor	hp	-		-		2		-		-	
Blower Wheel Size (Dia. x W x Qty)	in	-		-		15 x 15 x 2		-		-	
Refrigeration Charge (Circuit)	oz	-		-		146		-		-	
Refrigeration Charge (Total)	oz	-		-		292		-		-	
Weight - Operating	lbs	-		-		1,655		-		-	
Weight - Shipping	lbs	-		-		1,755		-		-	

Bosch Thermotechnology Corp. reserves the right to make changes without notice due to continuing engineering and technological advances | BTC 761008103 H | 09.2026

Horizontal Cabinet Corner Weights										
Configuration			Left Hand Evaporator				Right Hand Evaporator			
Model Number	Unit	Total	Left Front*	Right Front*	Left Back	Right Back	Left Front*	Right Front*	Left Back	Right Back
072	Lbs	670.0	147.0	274.0	137.0	112.0	-	-	-	-
	kg	304.5	66.8	124.5	62.3	50.9	-	-	-	-
096	Lbs	702.0	155.0	287.0	143.0	117.0	-	-	-	-
	kg	319.1	70.5	130.5	65.0	53.2	-	-	-	-
120	Lbs	935.0	206.0	382.0	191.0	156.0	-	-	-	-
	kg	425.0	93.6	173.6	86.8	70.9	-	-	-	-
150	Lbs	1060.0	233.0	434.0	216.0	177.0	-	-	-	-
	kg	481.8	105.9	197.3	98.2	80.5	-	-	-	-
180	Lbs	1530.0	337.0	626.0	312.0	255.0	-	-	-	-
	kg	695.5	153.2	284.5	141.8	115.9	-	-	-	-
242	Lbs	1655.0	365.0	677.0	337.0	276.0	-	-	-	-
	kg	752.3	165.9	307.7	153.2	125.5	-	-	-	-

*Front is control box end

Bosch Thermotechnology Corp. reserves the right to make changes without notice due to continuing engineering and technological advances | BTC 761008103 H | 09.2026

Capacity Data

For authorized users only.

- For extended performance data please access Bosch Select Tool 2.0 (BST2.0) in your device
- To obtain an access, please scan the QR code and enter your information (for authorized users with login credentials)

Scan QR Code

Bosch Thermotechnology Corp.
Londonderry, NH • Watertown, MA • Ft. Lauderdale, FL

Bosch Thermotechnology Corp. reserves the right to make changes without notice due to continuing engineering and technological advances | BTC 761008103 H | 09.2026

Tel: 1-800-283-3787 | www.bosch-homecomfort.us

Temperature Pressure Operating Data - 072

Enter Fluid Temp (°F)	Water Flow (GPM)	Cooling				Heating			
		Suction Pressure (PSIG)	Discharge Pressure (PSIG)	Water Temp Rise (°F)	Air Temp Drop (°F)	Suction Pressure (PSIG)	Discharge Pressure (PSIG)	Water Temp Drop (°F)	Air Temp Rise (°F)
30	10.0	Operation Not Recommended				53-68	229-291	7-8	19-22
	16.0					56-72	232-297	5-6	21-24
40	10.0	102-129	162-203	17-21	19-23	62-80	239-305	8-10	22-26
	16.0	101-127	146-183	11-14	19-23	67-86	243-312	5-6	23-27
50	10.0	103-131	186-235	18-21	19-23	74-95	251-321	9-11	24-28
	16.0	103-129	169-214	11-13	18-23	79-102	256-329	6-8	26-30
60	10.0	105-133	213-271	17-20	18-22	86-110	264-338	11-13	27-32
	16.0	105-132	195-247	11-13	18-22	93-120	271-348	7-9	29-34
70	10.0	108-136	243-310	17-21	19-22	100-127	279-357	12-15	31-36
	16.0	107-134	225-285	11-13	19-22	109-139	288-368	8-10	33-38
80	10.0	109-138	277-352	17-21	18-22	116-147	296-377	14-17	34-39
	16.0	108-136	259-327	11-13	18-22	127-161	307-392	9-11	36-42
90	10.0	111-140	316-400	17-20	18-21	134-168	314-399	16-19	38-44
	16.0	111-139	297-373	11-13	18-21	147-185	328-416	10-13	40-47
100	10.0	114-143	359-450	17-20	17-21	Operation Not Recommended			
	16.0	113-141	340-423	10-12	17-21				

Temperature Pressure Operating Data - 096

Enter Fluid Temp (°F)	Water Flow (GPM)	Cooling				Heating			
		Suction Pressure (PSIG)	Discharge Pressure (PSIG)	Water Temp Rise (°F)	Air Temp Drop (°F)	Suction Pressure (PSIG)	Discharge Pressure (PSIG)	Water Temp Drop (°F)	Air Temp Rise (°F)
30	13.0	Operation Not Recommended				59-74	257-322	8-9	24-28
	22.0					61-78	260-327	5-6	25-29
40	13.0	98-123	177-212	17-20	20-25	69-88	271-341	10-11	26-31
	22.0	97-121	157-190	10-12	20-25	74-94	276-347	6-7	28-33
50	13.0	99-125	203-245	17-20	20-25	82-105	286-360	11-13	29-35
	22.0	99-123	181-221	9-12	20-25	88-112	294-369	7-8	31-37
60	13.0	101-128	230-281	17-20	20-25	96-122	304-382	12-14	33-40
	22.0	97-122	166-214	10-12	20-25	104-132	314-394	8-9	35-42
70	13.0	99-126	203-262	17-19	20-25	111-141	324-406	13-16	36-44
	22.0	99-125	194-250	10-12	20-25	121-153	337-421	9-10	39-47
80	13.0	105-132	295-362	16-19	19-23	129-162	346-433	16-18	40-48
	22.0	104-131	274-337	9-11	19-24	142-177	364-452	10-11	43-52
90	13.0	106-135	334-409	15-18	19-24	148-185	372-463	17-20	44-53
	22.0	106-133	313-385	10-11	19-24	165-204	395-488	11-13	47-57
100	13.0	108-137	376-459	15-17	19-23	Operation Not Recommended			
	22.0	108-135	357-436	9-11	19-23				

Bosch Thermotechnology Corp. reserves the right to make changes without notice due to continuing engineering and technological advances | BTC 761008103 H | 09.2026

Temperature Pressure Operating Data - 120									
Enter Fluid Temp (°F)	Water Flow (GPM)	Cooling				Heating			
		Suction Pressure (PSIG)	Discharge Pressure (PSIG)	Water Temp Rise (°F)	Air Temp Drop (°F)	Suction Pressure (PSIG)	Discharge Pressure (PSIG)	Water Temp Drop (°F)	Air Temp Rise (°F)
30	16.0	Operation Not Recommended				56-72	257-316	9-10	21-24
	32.0					59-76	261-322	4-5	22-25
40	16.0	96-122	168-210	19-22	19-23	67-86	271-333	10-11	24-28
	32.0	94-119	147-186	10-11	18-23	72-92	276-340	5-6	25-29
50	16.0	97-125	192-241	18-21	19-22	72-108	286-351	12-13	27-31
	32.0	96-123	170-216	10-11	19-23	78-116	295-361	6-7	29-33
60	16.0	98-127	220-276	18-21	18-22	94-118	304-372	13-15	30-35
	32.0	97-125	197-250	9-10	19-23	102-128	315-384	7-8	31-37
70	16.0	100-130	252-315	18-21	19-22	109-137	324-395	15-17	33-39
	32.0	99-127	228-288	9-11	18-22	121-149	340-413	8-10	35-41
80	16.0	101-132	288-359	18-21	18-22	126-156	348-422	17-19	37-43
	32.0	101-131	263-330	9-11	18-22	142-173	367-443	9-11	39-46
90	16.0	103-135	327-407	18-21	18-21	146-178	372-449	19-21	40-47
	32.0	102-133	301-377	9-11	18-22	165-199	396-475	10-12	44-51
100	16.0	105-138	370-460	18-20	17-21	Operation Not Recommended			
	32.0	105-136	345-429	9-11	17-21				

Temperature Pressure Operating Data - 150/151									
Enter Fluid Temp (°F)	Water Flow (GPM)	Cooling				Heating			
		Suction Pressure (PSIG)	Discharge Pressure (PSIG)	Water Temp Rise (°F)	Air Temp Drop (°F)	Suction Pressure (PSIG)	Discharge Pressure (PSIG)	Water Temp Drop (°F)	Air Temp Rise (°F)
30	22.0	Operation Not Recommended				52-68	231-286	6-7	18-20
	38.0					56-73	235-290	4-5	18-21
40	22.0	105-132	176-217	15-19	18-22	63-82	241-298	8-9	20-23
	38.0	105-131	161-199	9-11	18-22	68-88	245-304	5-5	21-24
50	22.0	106-135	202-249	14-18	18-22	68-105	253-313	9-10	23-26
	38.0	106-134	185-229	9-11	18-23	74-112	258-319	5-6	24-28
60	22.0	107-137	230-284	15-18	18-22	90-115	266-328	10-11	25-29
	38.0	107-136	213-264	8-10	18-22	97-123	273-337	6-7	27-31
70	22.0	106-137	208-269	15-18	18-22	105-133	281-347	12-13	29-33
	38.0	108-138	244-302	8-10	18-22	115-144	290-357	7-8	30-35
80	22.0	109-142	297-365	14-17	18-21	123-153	299-367	14-15	32-37
	38.0	109-140	280-345	8-10	17-21	135-167	311-381	8-9	33-39
90	22.0	111-144	336-413	14-17	17-20	143-176	319-390	15-17	35-40
	38.0	110-142	318-391	9-10	17-21	157-192	334-407	10-11	38-44
100	22.0	112-146	377-465	14-17	17-20	Operation Not Recommended			
	38.0	112-145	360-442	9-10	16-20				

Bosch Thermotechnology Corp.
Londonderry, NH • Watertown, MA • Ft. Lauderdale, FL

Bosch Thermotechnology Corp. reserves the right to make changes without notice due to continuing engineering and technological advances | BTC 761008103 H | 09.2026

Tel: 1-800-283-3787 | www.bosch-homecomfort.us

Temperature Pressure Operating Data - 180/181

Enter Fluid Temp (°F)	Water Flow (GPM)	Cooling				Heating			
		Suction Pressure (PSIG)	Discharge Pressure (PSIG)	Water Temp Rise (°F)	Air Temp Drop (°F)	Suction Pressure (PSIG)	Discharge Pressure (PSIG)	Water Temp Drop (°F)	Air Temp Rise (°F)
30	25.0	Operation Not Recommended				51-65	229-284	6-7	16-19
	45.0					55-70	232-289	3-4	17-20
40	25.0	105-130	181-222	15-19	17-21	61-77	238-296	7-9	18-22
	45.0	104-127	164-202	8-10	17-22	66-83	243-303	4-5	19-24
50	25.0	106-132	206-253	14-18	17-21	67-98	249-310	8-10	21-25
	45.0	105-130	189-233	8-10	17-21	73-106	255-317	4-6	22-27
60	25.0	107-134	235-289	14-18	17-21	86-107	262-325	9-11	23-28
	45.0	106-132	216-267	8-10	16-21	94-116	270-335	5-7	25-30
70	25.0	105-133	211-272	14-18	17-21	101-125	277-343	11-13	26-31
	45.0	107-134	248-306	8-10	17-21	111-136	288-356	6-8	28-34
80	25.0	109-138	303-371	14-18	16-20	118-144	295-364	12-15	29-35
	45.0	109-137	283-348	8-10	16-20	130-158	308-379	7-9	31-37
90	25.0	110-140	341-418	14-17	16-19	136-165	314-386	13-16	32-39
	45.0	110-139	322-395	7-10	16-20	152-182	330-404	8-10	35-42
100	25.0	111-142	383-471	14-18	15-19	Operation Not Recommended			
	45.0	111-141	365-447	8-10	16-20				

Temperature Pressure Operating Data - 210

Enter Fluid Temp (°F)	Water Flow (GPM)	Cooling				Heating			
		Suction Pressure (PSIG)	Discharge Pressure (PSIG)	Water Temp Rise (°F)	Air Temp Drop (°F)	Suction Pressure (PSIG)	Discharge Pressure (PSIG)	Water Temp Drop (°F)	Air Temp Rise (°F)
30	28.0	Operation Not Recommended				56-72	236-298	8-9	21-25
	52.0					73-90	288-351	1-2	24-28
40	28.0	95-121	123-166	18-22	19-23	70-88	270-335	9-11	24-28
	52.0	94-119	115-156	10-12	20-24	81-101	287-353	2-3	26-30
50	28.0	97-125	148-198	17-21	19-23	76-111	304-372	11-13	26-31
	52.0	96-123	139-186	10-12	18-23	82-119	286-356	6-7	28-33
60	28.0	100-129	172-229	17-21	18-22	97-121	290-361	12-15	30-35
	52.0	99-127	162-216	9-11	18-22	106-131	299-371	7-9	32-37
70	28.0	103-133	200-264	15-20	18-22	113-140	307-381	13-16	33-39
	52.0	102-131	190-251	9-11	18-22	125-153	320-396	8-10	35-40
80	28.0	105-136	232-305	15-19	18-21	131-161	326-403	16-19	36-43
	52.0	104-134	220-289	8-11	17-21	146-177	342-422	9-11	38-45
90	28.0	106-138	267-349	15-19	17-21	151-183	348-428	18-21	39-46
	52.0	106-137	255-332	8-11	17-21	169-203	368-450	10-12	42-49
100	28.0	108-142	305-398	14-19	17-20	Operation Not Recommended			
	52.0	108-140	293-379	7-10	17-21				

Bosch Thermotechnology Corp. reserves the right to make changes without notice due to continuing engineering and technological advances | BTC 761008103 H | 09.2026

Temperature Pressure Operating Data - 240/242

Enter Fluid Temp (°F)	Water Flow (GPM)	Cooling				Heating			
		Suction Pressure (PSIG)	Discharge Pressure (PSIG)	Water Temp Rise (°F)	Air Temp Drop (°F)	Suction Pressure (PSIG)	Discharge Pressure (PSIG)	Water Temp Drop (°F)	Air Temp Rise (°F)
30	32.0	Operation Not Recommended				59-75	301-358	8-10	22-26
	64.0					62-78	266-324	4-5	22-27
40	32.0	100-125	166-204	17-21	18-22	69-87	284-346	10-11	24-28
	64.0	98-122	145-180	9-11	18-22	74-93	273-336	5-6	25-30
50	32.0	98-124	150-196	17-21	18-22	81-102	282-348	11-12	27-32
	64.0	100-125	169-212	9-11	17-22	88-110	290-358	6-7	28-34
60	32.0	100-127	176-229	16-20	17-22	96-119	298-369	13-15	30-36
	64.0	100-125	165-215	8-11	18-22	105-130	308-381	7-8	32-38
70	32.0	102-129	204-265	16-20	18-22	112-139	318-394	14-16	33-39
	64.0	101-127	193-250	8-11	18-22	124-152	332-410	8-9	35-42
80	32.0	106-134	287-356	17-21	17-21	131-160	341-421	15-18	37-44
	64.0	106-132	263-327	8-10	17-21	145-176	359-442	8-10	40-47
90	32.0	108-136	327-403	16-20	17-21	152-184	366-452	17-20	40-48
	64.0	107-134	303-374	8-10	17-21	169-203	388-475	9-11	44-52
100	32.0	110-139	372-456	17-20	16-20	Operation Not Recommended			
	64.0	110-137	347-426	8-10	16-20				

Temperature Pressure Operating Data - 300

Enter Fluid Temp (°F)	Water Flow (GPM)	Cooling				Heating			
		Suction Pressure (PSIG)	Discharge Pressure (PSIG)	Water Temp Rise (°F)	Air Temp Drop (°F)	Suction Pressure (PSIG)	Discharge Pressure (PSIG)	Water Temp Drop (°F)	Air Temp Rise (°F)
30	45.0	Operation Not Recommended				55-71	263-320	7-9	22-26
	75.0					57-73	266-324	4-5	22-27
40	45.0	89-115	124-170	15-19	18-23	66-84	277-339	9-10	25-29
	75.0	89-114	119-162	10-13	18-23	69-88	281-344	5-6	25-30
50	45.0	92-119	148-202	15-18	17-22	79-100	294-360	10-11	28-33
	75.0	91-117	142-192	9-12	17-22	83-105	299-367	6-7	28-34
60	45.0	95-122	173-234	15-18	18-22	95-118	314-385	11-13	30-36
	75.0	94-121	166-223	9-11	18-22	99-124	320-393	7-8	32-38
70	45.0	96-124	200-269	15-18	17-22	111-138	337-413	13-15	34-40
	75.0	96-123	193-257	8-11	17-22	117-145	345-423	8-9	35-42
80	45.0	98-126	232-308	14-17	17-21	131-160	362-442	14-17	38-45
	75.0	98-126	224-295	9-11	17-22	138-169	370-453	8-10	39-46
90	45.0	100-129	267-350	14-17	17-21	154-186	390-476	15-18	42-50
	75.0	100-128	258-336	8-10	17-21	161-195	400-487	9-11	43-51
100	45.0	102-132	307-398	13-16	16-20	Operation Not Recommended			
	75.0	102-131	297-382	8-10	16-20				

Bosch Thermotechnology Corp.
Londonderry, NH • Watertown, MA • Ft. Lauderdale, FL

Bosch Thermotechnology Corp. reserves the right to make changes without notice due to continuing engineering and technological advances | BTC 761008103 H | 09.2026

Tel: 1-800-283-3787 | www.bosch-homecomfort.us

Temperature Pressure Operating Data - 360

Enter Fluid Temp (°F)	Water Flow (GPM)	Cooling				Heating			
		Suction Pressure (PSIG)	Discharge Pressure (PSIG)	Water Temp Rise (°F)	Air Temp Drop (°F)	Suction Pressure (PSIG)	Discharge Pressure (PSIG)	Water Temp Drop (°F)	Air Temp Rise (°F)
30	50.0	Operation Not Recommended				44-59	266-328	7-8	19-22
	90.0					50-66	269-334	4-5	20-23
40	50.0	90-117	192-233	18-22	18-22	53-71	272-338	8-10	20-24
	90.0	89-115	176-213	10-13	18-22	61-80	282-351	5-6	22-26
50	50.0	91-119	214-263	19-22	17-21	63-84	286-356	9-11	23-27
	90.0	91-117	197-242	10-12	17-22	72-95	298-371	6-8	25-29
60	50.0	93-121	240-298	19-22	17-21	74-98	300-374	11-13	25-30
	90.0	92-119	223-275	10-12	17-21	85-112	316-393	6-8	28-33
70	50.0	95-123	270-337	18-22	17-20	86-113	317-395	12-15	28-33
	90.0	94-121	251-311	10-12	17-20	100-130	337-417	7-9	31-36
80	50.0	96-125	303-378	18-22	16-20	100-131	336-417	14-17	31-36
	90.0	96-124	284-352	10-12	17-21	117-151	361-446	8-10	34-40
90	50.0	98-127	341-425	18-21	17-20	115-149	358-443	15-18	34-40
	90.0	98-126	322-398	10-12	17-20	135-173	389-477	9-12	37-44
100	50.0	101-130	383-474	18-21	16-20	Operation Not Recommended			
	90.0	100-128	364-447	10-12	16-20				

Bosch Thermotechnology Corp.
Londonderry, NH • Watertown, MA • Ft. Lauderdale, FL

Bosch Thermotechnology Corp. reserves the right to make changes without notice due to continuing engineering and technological advances | BTC 761008103 H | 09.2026

Tel: 1-800-283-3787 | www.bosch-homecomfort.us