CP Model Series
Commercial Water Source Heat Pumps

Engineering Submittal Sheet

BOSCH

Overview and Certifications

- 2 to 6 ton capacities
- Two stage high efficiency cabinet
- New and improved scroll compressors
- Option rich features and components
- Brand-new unit design
- Low GWP ready (R-454B refrigerant)

Commercial WSHP Product Portfolio

		Water-to-Air							Water-to-Water	
Product		CP	CP Splits	CF	CL	CA	EC	MC	WT	WW
Price		$$$	$$$	$$	$	$	$$	$$	$$	$$
Model Sizes <6 Ton	007			X	X					
	009			X	X	X				
	012			X	X	X				
	015			X	X	X				
	018			X	X	X				
	024	X	X	X	X					
	025								X	
	030			X	X					
	035								X	
	036	X	X	X	X					
	041									
	042			X	X					
	048	X	X	X	X					
	049								X	
	060	X	X	X	X					
	061								X	
	070	X		X	X					
	071								X	
Model Sizes >6 Ton	072						X			
	096						X			
	120						X			X
	122									X
	150						X			
	151						X			
	180						X			X
	181						X			
	210						X			X
	240						X			X
	300						X			
	360						X	X		X
	420									X
	480							X		
	600							X		
	720							X		

Featured model

Bosch Thermotechnology Corp.
Londonderry, NH • Watertown, MA • Ft. Lauderdale, FL

Bosch Thermotechnology Corp. reserves the right to make changes without notice due to continuing engineering and technological advances | BTC 771608301 C | 09.2026

Tel: 1-800-283-3787 | www.bosch-homecomfort.us

Model Nomenclature

CP	024	-	1	VT	C	-	L	L	T	A	D	A	-	X	A	G	X	X	X	X	X	X	7	X	X	X	X	1	X	X	X	X	S	B	A
1-2	3-5	6	7	8-9	10	11	12	13	14	15	16	17	18	19	20	21	22	23	24	25	26	27	28	29	30	31	32	33	34	35	36	37	38	39	40

MODEL:
CP

NOMINAL CAPACITY:
024, 036,048, 060, 070

ELECTRICAL CONFIGURATION:
1 - 208-230/60/1
2 - 277/60/1
3 - 208-230/60/3
4 - 460/60/3

CABINET CONFIGURATION:
HZ - Horizontal
VT - Vertical

COAX OPTIONS:
C - Copper
N - Cupro-nickel

WATER CONNECTIONS:
A - Front Right Water
L - Front Left Water

RETURN AIR CONFIGURATION:
L - Left
R - Right

DISCHARGE AIR LOCATION:
E - End Blow
S - Straight Through
T - Top

FAN/MOTOR OPTION:
A - Constant Airflow ECM
T - Constant Torque ECM

AIR COIL:
D - DuoGuard
U - Uncoated

REVISION LEVEL:
A - Current

ELECTRIC HEAT:
X - None
A - 5 kW
C - 10 kW
D - 15 kW
E - 20 kW

CABINET CONSTRUCTION:
A - G90 Steel / 1/2" 1.5 LB Dual Density Fiberglass
C - G90 Steel / 1/2" Closed Cell Foam
D - G90 Steel / 1/2" 1.5LB Dual Density Fiberglass, Extra Quiet
F - G90 Steel / 1/2" Closed Cell Foam, Extra Quiet
2 - G90 Steel / 1/2" Closed Cell Foam, 2% Air Leakage
3 - G90 Steel / 1/2" Closed Cell Foam, Extra Quiet, 2% Air Leakage

APPLICATION:
G - Extended Range (Geothermal)

CODE STRING LEVEL:
A - Revision

CHANNEL:
B - Bosch

STANDARD/SPECIAL:
S - Standard
A - Special #1

AGENCY OPTIONS:
X - R-454B Refrigerant
D - Dual Point Power
G - 100k SCCR

NOT USED:
X - None

DRIVE SPEED (MC ONLY)
X - N/A

MOTOR HP/QTY (BELT DRIVE ONLY)
X - N/A

AIR FILTRATION:
1 - 1" Throwaway - 2-Sided Filter Rack (Side Access)
2 - MERV13 - 4" 4-Sided Filter Rack (Side Access)
4 - MERV8 - 2" 4-Sided Filter Rack (Side Access)
5 - MERV13 - 2" 4-Sided Filter Rack (Side Access)
A - 1" Throwaway - 2-Sided Filter Rack (Bottom Access)
B - MERV13 - 4" 4-Sided Filter Rack (Bottom Access)
D - MERV8 - 2" 4-Sided Filter Rack (Bottom Access)
E - MERV13 - 2" 4-Sided Filter Rack (Bottom Access)

DESTINATION SPECIFIC REQUIREMENT:
X - None
A - French & English Documentation

ECONOMIZER:
X - None
E - Economizer With 3 Way Valve and Controls

WATER FLOW CONTROL OPTIONS:
X - None
2 - 2 Way Solenoid Valve
3 - MeasureFlow (3 GPM/Ton)
4 - 2 Way Solenoid + MeasureFlow
5 - Circulating Pump
6 - Water Regulating Valve Connection
7 - 2 Way Solenoid + Flow Proving
8 - 2 Way Solenoid + MeasureFlow + Flow Proving
9 - 2 Measured Flow + Flow Proving
H - Flow Proving Switch (DPS)

CONTROLS:
X - Standard
M - DDC - Multi-Protocol (BacNET, Modbus, N2)

TRANSFORMER:
7 - 75 VA
1 - 100 VA

REFRIGERATION:
X - None
C - Hot Gas Bypass with Hot Gas Reheat
H - Hot Gas Reheat - On/Off
B - Hot Gas Bypass
D - Heat Recovery Package
M - Hot Gas Reheat - Modulating

ELECTRICAL OPTIONS:
X - As default for non used electrical codes
B - Blower Monitor Relay
E - Pump/valve Relay
J - Disconnect Switch
L - Refrigerant Leak Detection Sensor
A - EMS Relay
C - Compressor Monitor Relay
G - Boilerless Control
K - Fire Alarm Relay/Dual Power
M - Wire transformer to 208 volts

Bosch Thermotechnology Corp. reserves the right to make changes without notice due to continuing engineering and technological advances | BTC 771608301 C | 09.2026

AHRI Ratings (13256-1) - Copper Water Coil & ECM Motor

Model Number	Configuration	Load	Water Loop Heat Pump				Ground Water Heat Pump				Ground Loop Heat Pump				CFM	GPM
			Cooling 86 deg.F		Heating 68 deg.F		Cooling 59 deg.F		Heating 50 deg.F		FL Cooling 77 deg.F PL Cooling 68 deg.F		FL Heating 32 deg.F PL Heating 41 deg.F			
			Capacity Btu/h	EER Btuh/W-h	Capacity Btu/h	COP	Capacity Btu/h	EER Btuh/W-h	Capacity Btu/h	COP	Capacity Btu/h	EER Btuh/W-h	Capacity Btu/h	COP		
024	VT	Full	25,000	16.5	28,500	5.6	27,000	24.0	23,000	4.8	25,500	18.5	18,000	4.0	800	6.00
		Part	18,000	18.5	20,000	6.2	20,000	31.5	16,000	5.0	19,500	27.0	14,000	4.4	650	6.00
	HZ	Full	25,000	16.5	28,500	5.6	27,000	24.0	23,000	4.8	25,500	18.5	18,000	4.0	950	6.50
		Part	18,000	18.5	20,000	6.2	20,000	31.5	16,000	5.0	19,500	27.0	14,000	4.4	800	6.50
036	VT / HZ	Full	37,500	16.0	44,000	5.6	40,500	24.0	37,000	5.0	39,000	18.5	28,000	4.0	1,300	10.00
		Part	27,000	18.0	31,500	6.2	29,000	30.0	26,000	5.2	29,000	25.5	22,000	4.4	975	10.00
048	VT / HZ	Full	49,500	16.0	58,000	5.6	53,500	23.0	48,000	5.0	51,000	18.0	38,000	4.0	1,700	12.00
		Part	36,000	18.0	41,000	6.2	39,000	29.5	33,500	5.2	38,000	25.0	29,500	4.4	1,300	12.00
060	VT / HZ	Full	61,500	16.0	75,000	5.6	67,500	23.5	62,000	5.0	63,000	18.0	48,000	4.0	2,000	15.00
		Part	45,000	18.5	53,000	6.2	49,500	31.0	43,000	5.2	48,500	26.0	37,500	4.4	1,600	15.00
70	VT	Full	68,000	15.0	86,000	5.1	75,000	22.0	71,000	4.5	70,000	17.0	55,000	3.8	2,150	18.00
		Part	51,000	16.5	64,000	5.6	57,000	27.0	52,000	4.7	56,000	23.0	45,000	4.2	1,800	18.00
	HZ	Full	68,000	15.0	86,000	5.1	75,000	22.0	71,000	4.5	70,000	17.0	55,000	3.8	2,100	18.00
		Part	51,000	16.5	64,000	5.6	57,000	27.0	52,000	4.7	56,000	23.0	45,000	4.2	1,700	18.00

AHRI Ratings (13256-1) - Cupro-Nickel Water Coil & ECM Motor

Model Number	Configuration	Load	Water Loop Heat Pump				Ground Water Heat Pump				Ground Loop Heat Pump				CFM	GPM
			Cooling 86 deg.F		Heating 68 deg.F		Cooling 59 deg.F		Heating 50 deg.F		FL Cooling 77 deg.F PL Cooling 68 deg.F		FL Heating 32 deg.F PL Heating 41 deg.F			
			Capacity Btu/h	EER Btuh/W-h	Capacity Btu/h	COP	Capacity Btu/h	EER Btuh/W-h	Capacity Btu/h	COP	Capacity Btu/h	EER Btuh/W-h	Capacity Btu/h	COP		
024	VT	Full	24,500	16.5	28,000	5.6	26,500	24.0	22,500	4.8	25,000	18.5	17,500	4.0	800	6.00
		Part	17,500	18.5	19,500	6.2	19,500	31.5	15,500	5.0	19,000	27.0	13,500	4.4	650	6.00
	HZ	Full	24,500	16.5	28,000	5.6	26,500	24.0	22,500	4.8	25,000	18.5	17,500	4.0	950	6.50
		Part	17,500	18.5	19,500	6.2	19,500	31.5	15,500	5.0	19,000	27.0	13,500	4.4	800	6.50
036	VT / HZ	Full	37,000	16.0	43,500	5.6	40,000	23.5	36,500	5.0	38,500	18.3	27,500	4.0	1,300	10.00
		Part	26,500	18.0	31,000	6.2	28,500	29.5	25,500	5.2	28,500	25.3	21,500	4.4	975	10.00
048	VT / HZ	Full	49,000	15.5	57,500	5.6	53,000	22.5	47,500	5.0	50,500	17.5	37,500	4.0	1,700	12.00
		Part	35,500	17.5	40,500	6.2	38,500	29.0	33,000	5.2	37,500	24.5	29,000	4.4	1,300	12.00
060	VT / HZ	Full	61,000	16.0	75,000	5.6	67,000	23.0	61,500	5.0	62,500	18.0	47,500	4.0	2,000	15.00
		Part	44,500	18.5	53,000	6.2	49,000	30.5	42,500	5.2	48,000	26.0	37,000	4.4	1,600	15.00
70	VT	Full	68,000	15.0	86,000	5.1	74,000	21.5	71,000	4.5	70,000	16.8	55,000	3.8	2,150	18.00
		Part	51,000	16.5	64,000	5.6	57,000	26.5	52,000	4.7	55,000	22.8	45,000	4.2	1,800	18.00
	HZ	Full	68,000	15.0	86,000	5.1	74,000	21.5	71,000	4.5	70,000	16.8	55,000	3.8	2,100	18.00
		Part	51,000	16.5	64,000	5.6	57,000	26.5	52,000	4.7	55,000	22.8	45,000	4.2	1,700	18.00

Bosch Thermotechnology Corp. reserves the right to make changes without notice due to continuing engineering and technological advances | BTC 771608301 C | 09.2026

Vertical Unit Configurations

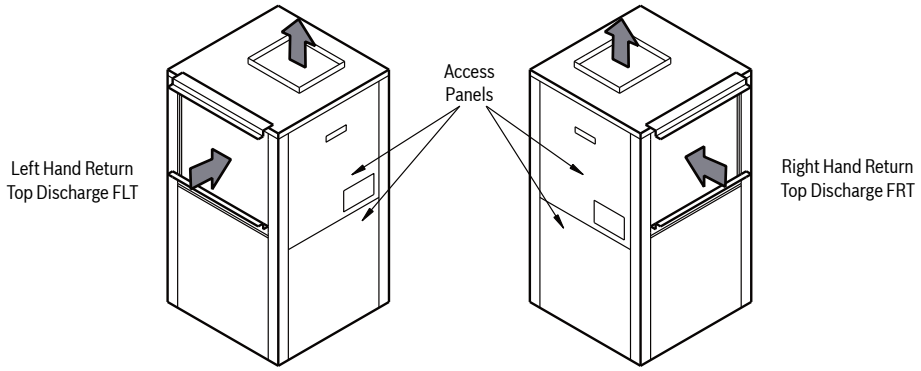

Horizontal Unit Configurations

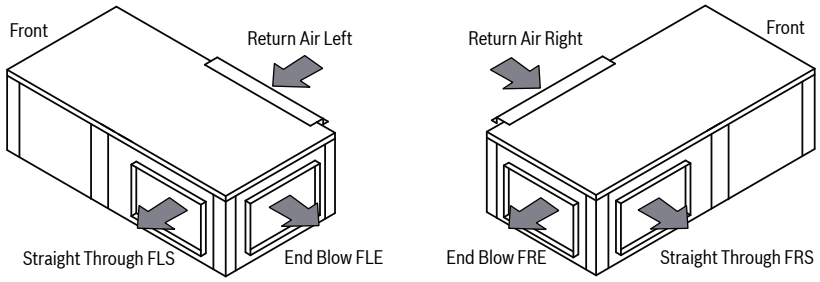

Unit Service clearances:
- Compressor & electrical box access: Minimum 24", 36" recommended.
- Blower access: Minimum 18", 24" recommended.

Please consult product IOM for more information.

Bosch Thermotechnology Corp.
Londonderry, NH • Watertown, MA • Ft. Lauderdale, FL

Bosch Thermotechnology Corp. reserves the right to make changes without notice due to continuing engineering and technological advances | BTC 771608301 C | 09.2026

Tel: 1-800-283-3787 | www.bosch-homecomfort.us

Vertical Unit Dimensions and Connections

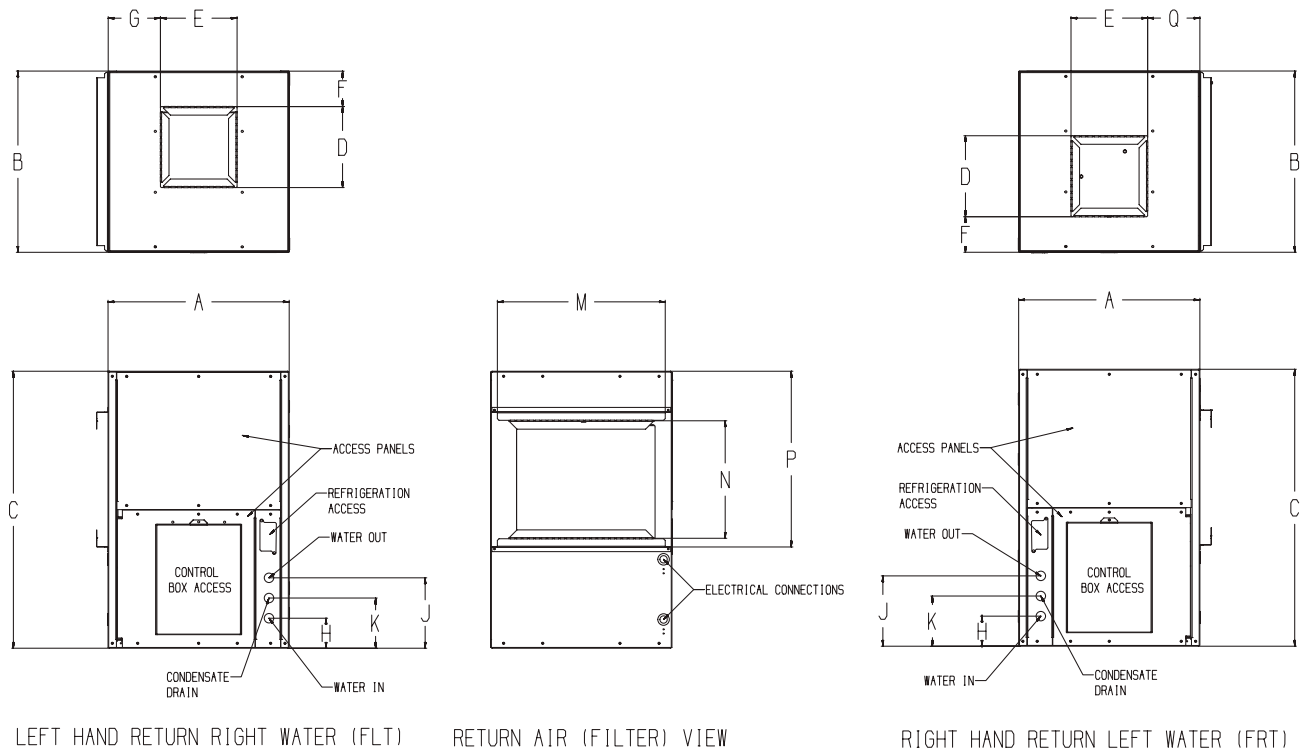

Vertical Unit Dimensions

Model Number	A Width	B Depth	C Height	D Discharge Depth	E Discharge Width	F Cabinet Edge to Discharge	G Left Side to Discharge	H Water Inlet	J Water Outlet	K Condensate Drain	M R/A Duct Width	N R/A Duct Flange Height	P Filter Rack Height	Q Cabinet Edge to Discharge (Right Hand Return)	Condenser Water Connections	Recommended Replacement Nominal Filter Size
024	21.50	26.00	44.00	11.25	10.50	5.75	5.50	3.25	8.50	5.75	18.25	24.75	27.25	5.50	3/4"FPT	19x27
036	24.00	26.00	44.00	11.25	10.50	5.00	6.75	3.25	8.50	5.75	24.00	28.00	30.00	6.75	3/4"FPT	24x30
048	24.00	33.00	51.00	13.50	12.00	8.50	6.00	3.00	8.25	5.50	30.00	34.25	37.25	6.00	1"FPT	18x30
060	25.00	33.00	58.00	13.50	14.75	9.00	6.00	3.00	8.25	5.50	30.00	40.00	42.75	6.00	1"FPT	24x30 & 18x30
070	25.00	33.00	58.00	13.50	14.75	9.00	6.00	3.00	8.25	5.50	30.00	40.00	42.75	6.00	1"FPT	24x30 & 18x30

NOTES: All dimensions within +/– 0.125". All condensate drain connections are 3/4" FPT. Specifications subject to change without notice. Overall unit dimensions do not include filter rack or duct flanges.

Bosch Thermotechnology Corp. reserves the right to make changes without notice due to continuing engineering and technological advances | BTC 771608301 C | 09.2026

Vertical Unit Options Dimensions

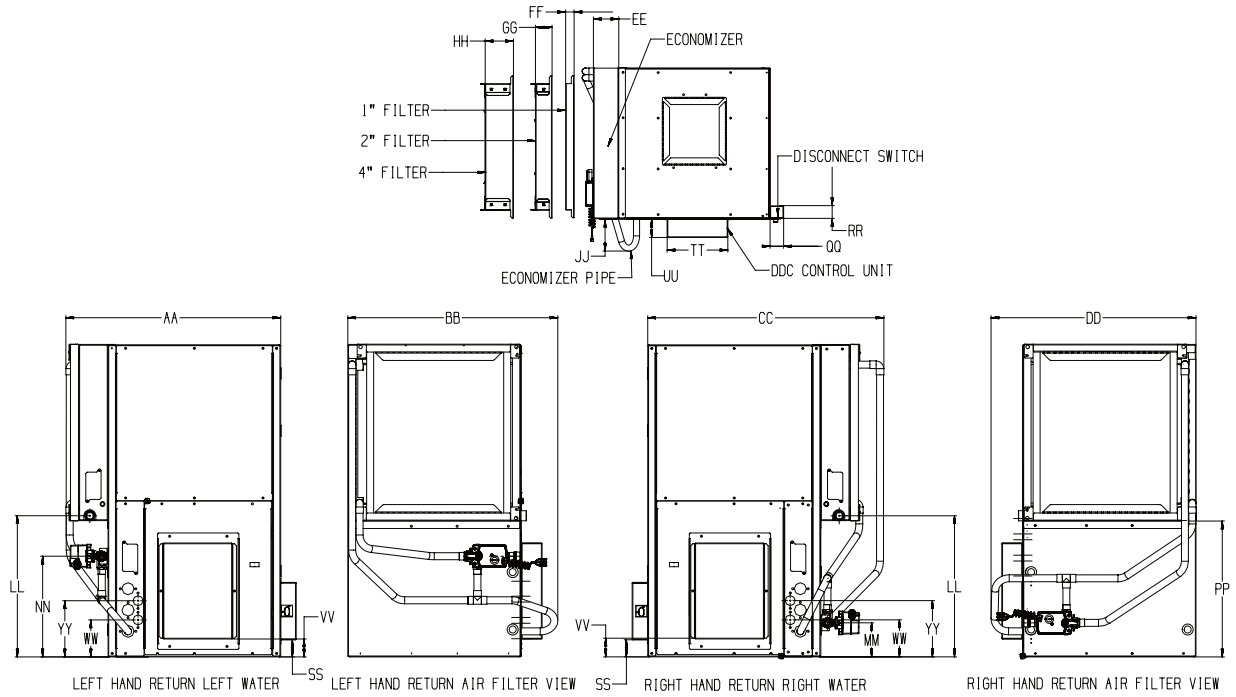

Vertical Unit Options Dimensions

Model	General				Economizer					Filter Racks				Disconnect Switch			DDC			HRP	
	AA	BB	CC	DD	EE	JJ	LL	MM	NN	FF	GG	HH	PP	QQ	RR	SS	TT	UU	VV	WW	YY
	Cabinet+ Economizer Width (Left Hand Return)	Cabinet+ Economizer Depth (Left Hand Return)	Cabinet+ Economizer Width (Right Hand Return)	Cabinet+ Economizer Depth (Right Hand Return)	Economizer	Economizer Pipe	Economizer Drain	Economizer Valve (Right Hand Return)	Economizer Valve (Left Hand Return)	1" Filter Rack	2" Filter Rack	4" Filter Rack	Filter Rack Height	Width	Depth	Height	Width	Depth	Height	Inlet	Outlet
024	30.00	29.50	30.00	29.50	3.50	3.50	18.75	9.25	15.00	1.25	2.25	4.25	16.75	2.00	2.00	2.00	9.00	3.00	2.00	4.50	7.00
036	32.50	30.25	32.50	30.50	3.75	4.25	14.75	7.25	11.00	1.25	2.25	4.25	14.00	2.00	2.00	2.00	9.00	3.00	2.00	4.50	7.00
048	32.00	38.75	33.50	37.25	3.75	5.75	13.25	4.00	9.50	1.25	2.25	4.25	13.75	2.00	2.00	2.50	9.00	3.00	3.00	4.50	7.00
060	33.00	39.25	33.00	36.50	3.75	3.25	14.00	7.25	9.50	1.25	2.25	4.25	15.25	2.00	2.00	2.50	9.00	3.00	2.25	4.50	7.00
070	33.00	39.25	33.00	36.50	3.75	3.25	14.00	7.25	9.50	1.25	2.25	4.25	15.25	2.00	2.00	2.50	9.00	3.00	2.25	4.50	7.00

NOTES: All dimensions within +/– 0.25“. Filter rack dimensions does not include 1" duct flange. 2" filter racks can accept either a 1" or 2" filter. 4" filter racks can accept either a 2" or 4" filter. Specifications subject to change without notice.

Bosch Thermotechnology Corp. reserves the right to make changes without notice due to continuing engineering and technological advances | BTC 771608301 C | 09.2026

Horizontal Unit Dimensions and Connections

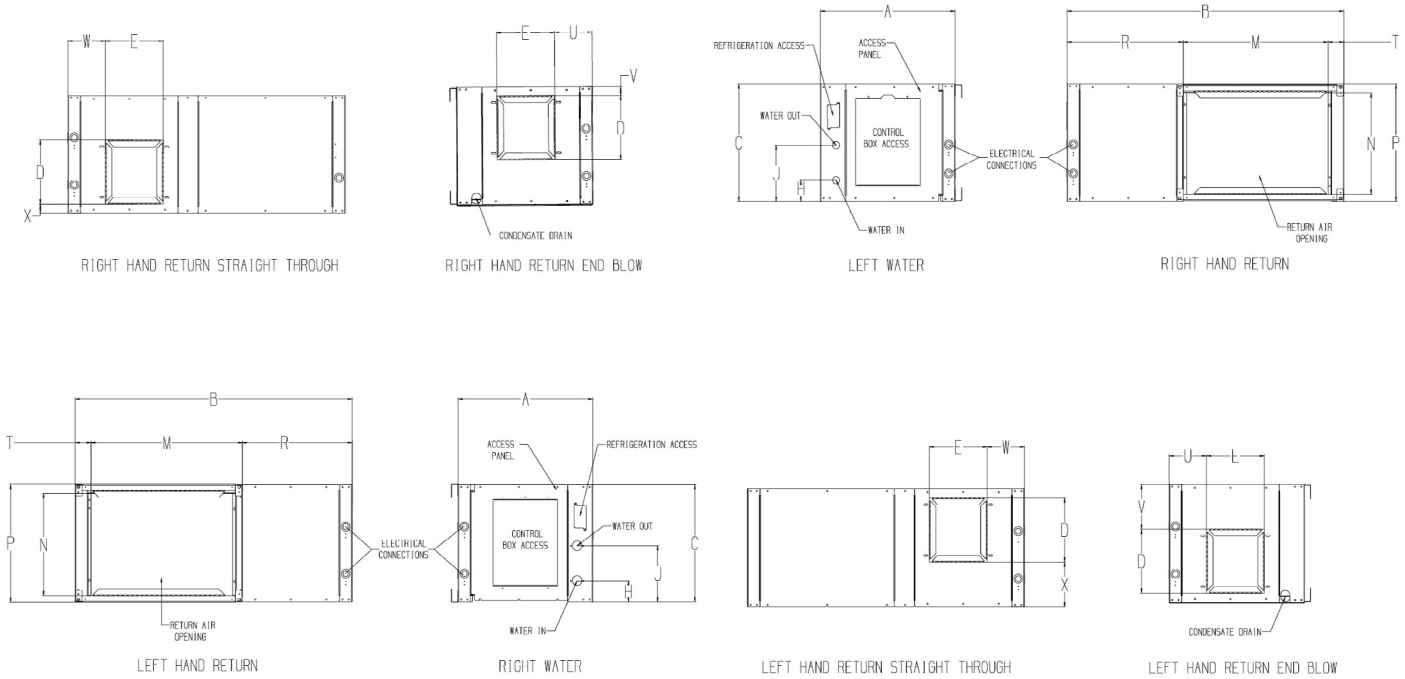

Horizontal Unit Dimensions

Model Number	A Width	B Depth	C Height	D Discharge Height	E Discharge Width	H Water Inlet	J Water Outlet	M R/A Duct Width	N R/A Duct Flange Height	P Filter Rack Height	R Cabinet Front to Filter Rack	T Cabinet End to Filter Rack	U Side to Discharge (Left Return End Blow)	U Side to Discharge (Right Return End Blow)	V Top to Discharge (Left Return End Blow)	V Top to Discharge (Right Return End Blow)	W End to Discharge (Left Straight Through)	W End to Discharge (Right Straight Through)	X Bottom to Discharge (Left Straight Through)	X Bottom to Discharge (Right Straight Through)	Condenser Water Connections	Recommended Replacement Nominal Filter Size	Condensate drain connection
024	21.50	47.00	19.00	11.25	10.50	3.25	8.75	29.25	16.00	18.00	15.50	2.25	5.75	5.75	6.00	1.75	5.75	5.75	6.00	1.75	3/4"FPT	18x30	3/4"FPT
036	24.00	54.00	21.00	12.50	11.75	3.25	8.50	33.25	18.00	20.00	19.50	1.25	5.50	5.50	7.00	1.50	5.50	5.50	7.00	1.50	3/4"FPT	20x34	3/4"FPT
048	24.00	65.00	21.00	12.50	11.75	3.00	8.25	43.50	18.00	20.50	16.00	5.25	5.50	5.50	7.00	1.50	5.50	5.50	7.00	1.50	1"FPT	20x24 (Qty 2)	3/4"FPT
060	24.00	75.25	21.00	12.50	11.75	3.00	8.25	49.50	18.00	20.25	22.50	3.00	5.50	5.50	7.00	1.50	4.75	4.75	7.00	1.50	1"FPT	20x25 (Qty 2)	3/4"FPT
070	24.00	75.25	21.00	12.50	11.75	3.00	8.25	49.50	18.00	20.25	22.50	3.00	5.50	5.50	7.00	1.50	4.75	4.75	7.00	1.50	1"FPT	20x25 (Qty 2)	3/4"FPT

NOTES: All dimensions within +/– 0.125". All condensate drain connections are 3/4" FPT. Units can be field converted between end blow and straight through supply air configurations.
Specifications subject to change without notice. Overall unit dimensions do not include filter rack or duct flanges.

Bosch Thermotechnology Corp. reserves the right to make changes without notice due to continuing engineering and technological advances | BTC 771608301 C | 09.2026

Horizontal Unit Options Dimensions

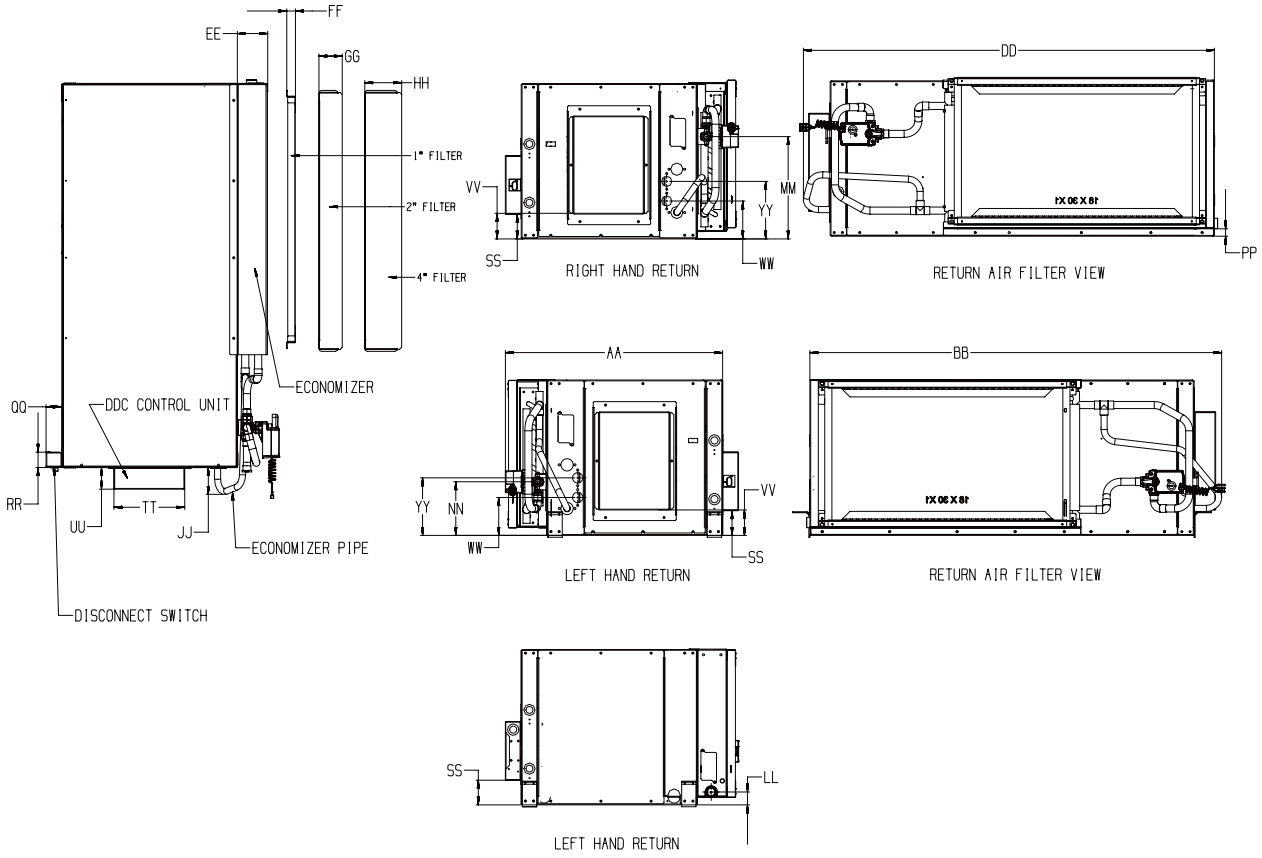

Horizontal Unit Options Dimensions

Model	Disconnect Switch			DDC			Economizer								Filter Racks				HRP	
	QQ	RR	SS	TT	UU	VV	EE	JJ	AA	DD	BB	LL	MM	NN	FF	GG	HH	PP	WW	YY
	Width	Depth	Height	Width	Depth	Height	Economizer	Economizer Pipe	Cabinet + Economizer Width	Cabinet Depth + Economizer (Right Hand Return)	Cabinet Depth + Economizer (Left Hand Return)	Economizer Drain	Economizer Valve (Right Hand Return)	Economizer Valve (Left Hand Return)	1" Filter Rack	2" Filter Rack	4" Filter Rack	Filter Rack Height	Inlet	Outlet
024	2.00	2.00	3.00	9.00	3.00	3.00	3.75	3.50	26.50	50.25	50.50	1.50	12.50	6.50	1.25	2.25	4.25	1.00	4.50	7.00
036	2.00	2.00	2.00	9.00	3.00	2.00	4.00	8.00	29.00	58.25	62.00	1.75	9.50	11.50	1.25	2.25	4.25	1.00	4.75	7.00
048	2.00	2.00	2.00	9.00	3.00	2.00	4.00	4.75	29.00	69.75	70.00	1.50	10.25	11.25	1.25	2.25	4.25	0.75	4.50	6.75
060	2.00	2.00	2.00	9.00	3.00	2.00	4.00	5.25	29.00	77.50	80.25	1.25	13.00	9.00	1.25	2.25	4.25	0.75	4.50	6.75
070	2.00	2.00	2.00	9.00	3.00	2.00	4.00	5.25	29.00	77.50	80.25	1.25	13.00	9.00	1.25	2.25	4.25	0.75	4.50	6.75

NOTES: All dimensions within +/– 0.25". Filter rack dimensions does not include 1" duct flange. 2" filter racks can accept either a 1" or 2" filter. 4" filter racks can accept either a 2" or 4" filter. Specifications subject to change without notice.

Bosch Thermotechnology Corp. reserves the right to make changes without notice due to continuing engineering and technological advances | BTC 771608301 C | 09.2026

Operating Limits				
Fluid Type	Limit		Cooling	Heating
Air	Minimum ambient air		50°F	40°F
	Maximum ambient air		100°F	85°F
	Rated ambient air		80°F	68°F
	Minimum Air coil entering air db/wb		65/57°F	45°F
	Maximum Air Coil entering air db/wb		95/85°F	80°F
	Rated Air coil entering air db/wb		80/67°F	68/59°F
Fluid	Antifreeze Protection Required LWT / EWT		-	< 40/< 50°F
	Minimum water coil entering fluid		45°F	20°F
	Maximum water coil entering fluid		110°F	80°F
	Rated water coil entering fluid	Water Loop application	86°F	68°F
		Ground Loop application	77°F	32°F
		Ground Water application	59°F	50°F
	Maximum operating water pressure	Standard unit	400psi/2,758kPA	
		With factory installed water valve option	300psi/2,068kPA	
	Minimum operating water flow rate		1.5 GPM per ton	

Bosch Thermotechnology Corp.
Londonderry, NH • Watertown, MA • Ft. Lauderdale, FL

Bosch Thermotechnology Corp. reserves the right to make changes without notice due to continuing engineering and technological advances | BTC 771608301 C | 09.2026

Tel: 1-800-283-3787 | www.bosch-homecomfort.us

Antifreeze Correction

Antifreeze Type	Antifreeze Volume %	Cooling EWT 90 Deg.F			Heating EWT 30 Deg. F		WPD Correction Factor EWT 30 °F
		Total Cap.	Sens. Cap	Power	Htg. Cap	Power	
Water	0	1.000	1.000	1.000	1.000	1.000	1.000
Propylene Glycol	5	0.998	0.998	1.004	0.995	0.999	1.085
	10	0.996	0.995	1.008	0.989	0.997	1.165
	15	0.994	0.992	1.012	0.980	0.995	1.257
	25	0.989	0.983	1.023	0.962	0.990	1.491
	35	0.981	0.972	1.040	0.938	0.984	1.812
	40	0.976	0.965	1.050	0.923	0.981	2.012
	45	0.970	0.956	1.062	0.907	0.977	2.240
	50	0.964	0.948	1.076	0.890	0.972	2.502
Methanol	5	0.997	0.997	1.003	0.990	0.997	1.060
	10	0.996	0.996	1.005	0.979	0.993	1.100
	15	0.994	0.994	1.008	0.970	0.990	1.140
Ethanol	5	0.998	0.998	1.002	0.981	0.994	1.160
	10	0.996	0.996	1.004	0.960	0.988	1.230
	15	0.992	0.992	1.006	0.944	0.983	1.280
	25	0.986	0.986	1.009	0.917	0.974	1.400
Ethylene Glycol	5	0.999	0.999	1.002	0.997	0.999	1.035
	10	0.998	0.996	1.005	0.993	0.998	1.086
	15	0.996	0.994	1.009	0.986	0.996	1.145
	25	0.992	0.988	1.018	0.974	0.993	1.278
	30	0.989	0.984	1.023	0.967	0.992	1.354
	35	0.986	0.979	1.029	0.960	0.990	1.436
	40	0.983	0.974	1.036	0.953	0.988	1.528
	45	0.979	0.969	1.044	0.944	0.986	1.629
	50	0.975	0.962	1.053	0.934	0.983	1.743

Bosch Thermotechnology Corp. reserves the right to make changes without notice due to continuing engineering and technological advances | BTC 771608301 C | 09.2026

Waterside Pressure Drop			
Model	Water Flow Rate (GPM)	Water Side Pressure Drop without Internal Valve (PSI)	Water Side Pressure Drop with Internal Valve (PSI)
024	3.0	1.1	1.2
	4.5	2.3	2.4
	6.0	3.7	3.9
	8.0	6.1	6.3
036	4.5	0.8	1.0
	6.8	1.6	1.9
	9.0	2.7	3.0
	12.0	4.4	4.8
048	6.0	1.2	1.3
	9.0	2.3	2.6
	12.0	3.9	4.3
	16.0	6.4	6.9
060	7.5	1.0	1.2
	11.3	2.1	2.3
	15.0	3.5	3.7
	20.0	5.7	6.1
070	9.0	1.4	1.6
	13.5	2.9	3.1
	18.0	4.8	5.0
	24.0	7.9	8.3

- All values based on pure water at 70° F.

Bosch Thermotechnology Corp. reserves the right to make changes without notice due to continuing engineering and technological advances | BTC 771608301 C | 09.2026

Electrical Data - Constant Torque ECM Blower Motor

Model Number	Voltage Code	Voltage/ Hz/ Phase	Voltage Min/Max	Compressor			Blower Motor		Total Unit FLA	Single Point Power			Dual Point Power					
													Compressor Circuit			Blower Motor Circuit		
				Qty	RLA	LRA	FLA	HP		Min. Circuit Amps	MOP CALC	MOP	Min. Circuit Amps	MOP CALC	MOP	Min. Circuit Amps	MOP CALC	MOP
24VT	1	208-230/1/60	197/253	1	10.3	62.0	2.8	0.33	13.1	15.7	26.0	25	12.9	23.2	20	3.5	6.3	15
	2	265/1/60	238/292	1	7.8	52.0	2.6	0.33	10.4	12.4	20.2	20	9.8	17.6	15	3.3	5.9	15
	3	208-230/3/60	197/253	1	6.3	56.0	2.8	0.33	9.1	10.7	17.0	15	7.9	14.2	15	3.5	6.3	15
	4	460/3/60	414/506	1	3.8	29.0	2.1	0.50	5.9	6.9	10.7	15	4.8	8.6	15	2.6	4.7	15
24HZ	1	208-230/1/60	197/253	1	10.3	62.0	4.1	0.50	14.4	17.0	27.3	25	12.9	23.2	20	5.1	9.2	15
	2	265/1/60	238/292	1	7.8	52.0	3.6	0.50	11.4	13.4	21.2	20	9.8	17.6	15	4.5	8.1	15
	3	208-230/3/60	197/253	1	6.3	56.0	4.1	0.50	10.4	12.0	18.3	15	7.9	14.2	15	5.1	9.2	15
	4	460/3/60	414/506	1	3.8	29	2.1	0.50	5.9	6.9	10.7	15	4.8	8.6	15	2.6	4.7	15
36	1	208-230/1/60	197/253	1	14.6	90	6.0	0.75	20.6	24.3	38.9	35	18.3	32.9	30	7.5	13.5	15
	2	265/1/60	238/292	1	12.5	79	4.9	0.75	17.4	20.5	33.0	30	15.6	28.1	25	6.1	11.0	15
	3	208-230/3/60	197/253	1	9.9	82	6.0	0.75	15.9	18.4	28.3	25	12.4	22.3	20	7.5	13.5	15
	4	460/3/60	414/506	1	4.8	44.3	2.7	0.75	7.5	8.7	13.5	15	6.0	10.8	15	3.4	6.1	15
48	1	208-230/1/60	197/253	1	18.3	138	6.0	0.75	24.3	28.9	47.2	45	22.9	41.2	40	7.5	13.5	15
	3	208-230/3/60	197/253	1	11.9	112	6.0	0.75	17.9	20.9	32.8	30	14.9	26.8	25	7.5	13.5	15
	4	460/3/60	414/506	1	6.8	61.8	2.7	0.75	9.5	11.2	18.0	15	8.5	15.3	15	3.4	6.1	15
60	1	208-230/1/60	197/253	1	25.2	147.3	7.6	1.00	32.8	39.1	64.3	60	31.5	56.7	50	9.5	17.1	15
	3	208-230/3/60	197/253	1	13.8	150	7.6	1.00	21.4	24.9	38.7	35	17.3	31.1	30	9.5	17.1	15
	4	460/3/60	414/506	1	6.9	58	3.5	1.0	10.4	12.1	19.0	15	8.6	15.5	15	4.4	7.9	15
70	1	208-230/1/60	197/253	1	28.0	166	7.6	1.00	35.6	42.6	70.6	70	35.0	63.0	60	9.5	17.1	15
	3	208-230/3/60	197/253	1	19.2	162.3	7.6	1.00	26.8	31.6	50.8	50	24.0	43.2	40	9.5	17.1	15
		460/3/60	414/506	1	9.1	70.8	3.5	1.00	12.6	14.9	24.0	20	11.4	20.5	20	4.4	7.9	15

Bosch Thermotechnology Corp. reserves the right to make changes without notice due to continuing engineering and technological advances | BTC 771608301 C | 09.2026

Electrical Data - Constant Airflow ECM Blower Motor

Model Number	Voltage Code	Voltage/ Hz/ Phase	Voltage Min/Max	Compressor			Blower Motor		Total Unit FLA	Single Point Power			Dual Point Power					
													Compressor Circuit			Blower Motor Circuit		
				Qty	RLA	LRA	FLA	HP		Min. Circuit Amps	MOP CALC	MOP	Min. Circuit Amps	MOP CALC	MOP	Min. Circuit Amps	MOP CALC	MOP
024	1	208-230/1/60	197/253	1	10.3	62.0	4.4	0.33	14.7	17.2	27.5	25	12.8	23.1	20	5.5	9.9	15
	2	265/1/60	238/292	1	7.8	52.0	4.7	0.33	12.5	14.5	22.3	20	9.8	17.6	15	5.9	10.6	15
	3	208-230/3/60	197/253	1	6.3	56.0	4.4	0.33	10.7	12.3	18.5	15	7.9	14.1	15	5.5	9.9	15
	4	460/3/60	414/506	1	3.8	29.0	4.7	0.33	8.5	9.7	14.4	15	4.7	8.5	15	5.9	10.6	15
036	1	208-230/1/60	197/253	1	14.6	90.0	8.4	0.75	23.0	26.6	41.1	40	18.2	32.7	30	10.5	18.9	15
	2	265/1/60	238/292	1	12.6	79.0	7.5	0.75	20.1	23.2	35.8	35	15.7	28.3	25	9.4	16.9	15
	3	208-230/3/60	197/253	1	9.9	82.0	8.4	0.75	18.3	20.7	30.6	30	12.3	22.2	20	10.5	18.9	15
	4	460/3/60	414/506	1	4.8	44.3	7.5	0.75	12.3	14.2	21.7	20	6.0	10.8	15	9.4	16.9	15
048	1	208-230/1/60	197/253	1	18.3	138.0	8.4	0.75	26.7	31.3	49.7	45	22.9	41.3	40	10.5	18.9	15
	3	208-230/3/60	197/253	1	11.9	112.0	8.4	0.75	20.3	23.3	35.2	35	14.9	26.8	25	10.5	18.9	15
	4	460/3/60	414/506	1	6.8	61.8	7.5	0.75	14.3	16.2	23.7	20	8.5	15.3	15	9.4	16.9	15
060	1	208-230/1/60	197/253	1	25.2	147.3	9.1	1.00	34.3	40.6	65.8	60	31.5	56.7	50	11.4	20.5	20
	3	208-230/3/60	197/253	1	13.8	161.0	9.1	1.00	22.9	26.3	40.1	40	17.2	31.0	30	11.4	20.5	20
	4	460/3/60	414/506	1	6.9	58.0	9.1	1.00	16.0	18.2	27.3	25	8.6	15.4	15	11.4	20.5	20
070	1	208-230/1/60	197/253	1	28.0	166.0	9.1	1.00	37.1	44.1	72.1	70	35.0	63.0	60	11.4	20.5	20
	3	208-230/3/60	197/253	1	18.9	162.3	9.1	1.00	28.0	32.7	51.6	50	23.6	42.5	40	11.4	20.5	20
	4	460/3/60	414/506	1	9.1	70.8	9.1	1.00	18.2	20.5	29.6	25	11.4	20.5	20	11.4	20.5	20

Bosch Thermotechnology Corp. reserves the right to make changes without notice due to continuing engineering and technological advances | BTC 771608301 C | 09.2026

Electrical Data - Constant Torque ECM Blower Motor - 5 kW

Model Number	Voltage Code	Voltage/ Hz/ Phase	Electric Heat + Blower						2nd Data Plate			
			Heater WATTS		Heater AMPS		MCA (W/Blower)		208V MCA	240V MCA	208V MOP (Max Fuse)	240V MOP (Max Fuse)
			208	240	208	240	208	240				
024	1	208-230/1/60	3.6k	4.8k	17.3	20.0	25.2	28.5	25.2	28.5	25	25
036	1	208-230/1/60	3.6k	4.8k	17.3	20.0	29.2	32.5	29.2	32.5	25	30
048	1	208-230/1/60	3.6k	4.8k	17.3	20.0	29.2	32.5	29.2	32.5	25	30
060	1	208-230/1/60	3.6k	4.8k	17.3	20.0	31.2	34.5	31.2	34.5	30	30
070	1	208-230/1/60	3.6k	4.8k	17.3	20.0	31.2	34.5	31.2	34.5	30	30

Electrical Data - Constant Torque ECM Blower Motor - 10 kW

Model Number	Voltage Code	Voltage/ Hz/ Phase	Electric Heat + Blower						2nd Data Plate			
			Heater WATTS		Heater AMPS		MCA (W/Blower)		208V MCA	240V MCA	208V MOP (Max Fuse)	240V MOP (Max Fuse)
			208	240	208	240	208	240				
024	1	208-230/1/60	7.2k	9.6k	34.7	40.0	46.8	53.5	46.8	53.5	45	50
036	1	208-230/1/60	7.2k	9.6k	34.7	40.0	50.8	57.5	50.8	57.5	50	50
048	1	208-230/1/60	7.2k	9.6k	34.7	40.0	50.8	57.5	50.8	57.5	50	50
060	1	208-230/1/60	7.2k	9.6k	34.7	40.0	52.8	59.5	52.8	59.5	50	50
070	1	208-230/1/60	7.2k	9.6k	34.7	40.0	52.8	59.5	52.8	59.5	50	50

Electrical Data - Constant Torque ECM Blower Motor - 15 kW

Model Number	Voltage Code	Voltage/ Hz/ Phase	Electric Heat + Blower						2nd Data Plate			
			Heater WATTS		Heater AMPS		MCA (W/Blower)		208V MCA	240V MCA	208V MOP (Max Fuse)	240V MOP (Max Fuse)
			208	240	208	240	208	240				
036	1	208-230/1/60	10.8k	14.4k	52.0	60.0	72.5	82.5	72.5	82.5	70	80
048	1	208-230/1/60	10.8k	14.4k	52.0	60.0	72.5	82.5	72.5	82.5	70	80
060	1	208-230/1/60	10.8k	14.4k	52.0	60.0	74.5	84.5	74.5	84.5	70	80
070	1	208-230/1/60	10.8k	14.4k	52.0	60.0	74.5	84.5	74.5	84.5	70	80

Electrical Data - Constant Torque ECM Blower Motor - 20 kW

Model Number	Voltage Code	Voltage/ Hz/ Phase	Electric Heat + Blower						2nd Data Plate			
			Heater WATTS		Heater AMPS		MCA (W/Blower)		208V MCA	240V MCA	208V MOP (Max Fuse)	240V MOP (Max Fuse)
			208	240	208	240	208	240				
048	1	208-230/1/60	14.4k	19.2k	69.3	80.0	94.2	107.5	94.2	107.5	90	100
060	1	208-230/1/60	14.4k	19.2k	69.3	80.0	96.2	109.5	96.2	109.5	90	100
070	1	208-230/1/60	14.4k	19.2k	69.3	80.0	96.2	109.5	96.2	109.5	90	100

Bosch Thermotechnology Corp. reserves the right to make changes without notice due to continuing engineering and technological advances | BTC 771608301 C | 09.2026

Electrical Data - Constant Airflow ECM Blower Motor - 5 kW

Model Number	Voltage Code	Voltage/ Hz/ Phase	Electric Heat + Blower						2nd Data Plate			
			Heater WATTS		Heater AMPS		MCA (W/Blower)		208V MCA	240V MCA	208V MOP (Max Fuse)	240V MOP (Max Fuse)
			208	240	208	240	208	240				
024	1	208-230/1/60	3.6k	4.8k	17.3	20.0	27.2	30.5	27.2	30.5	25	30
036	1	208-230/1/60	3.6k	4.8k	17.3	20.0	32.2	35.5	32.2	35.5	30	35
048	1	208-230/1/60	3.6k	4.8k	17.3	20.0	32.2	35.5	32.2	35.5	30	35
060	1	208-230/1/60	3.6k	4.8k	17.3	20.0	33.0	36.4	33.0	36.4	30	35
070	1	208-230/1/60	3.6k	4.8k	17.3	20.0	33.0	36.4	33.0	36.4	30	35

Electrical Data - Constant Airflow ECM Blower Motor - 10 kW

Model Number	Voltage Code	Voltage/ Hz/ Phase	Electric Heat + Blower						2nd Data Plate			
			Heater WATTS		Heater AMPS		MCA (W/Blower)		208V MCA	240V MCA	208V MOP (Max Fuse)	240V MOP (Max Fuse)
			208	240	208	240	208	240				
024	1	208-230/1/60	7.2k	9.6k	34.7	40.0	48.8	55.5	48.8	55.5	45	50
036	1	208-230/1/60	7.2k	9.6k	34.7	40.0	53.8	60.5	53.8	60.5	50	60
048	1	208-230/1/60	7.2k	9.6k	34.7	40.0	53.8	60.5	53.8	60.5	50	60
060	1	208-230/1/60	7.2k	9.6k	34.7	40.0	54.7	61.4	54.7	61.4	50	60
070	1	208-230/1/60	7.2k	9.6k	34.7	40.0	54.7	61.4	54.7	61.4	50	60

Electrical Data - Constant Airflow ECM Blower Motor - 15 kW

Model Number	Voltage Code	Voltage/ Hz/ Phase	Electric Heat + Blower						2nd Data Plate			
			Heater WATTS		Heater AMPS		MCA (W/Blower)		208V MCA	240V MCA	208V MOP (Max Fuse)	240V MOP (Max Fuse)
			208	240	208	240	208	240				
036	1	208-230/1/60	10.8k	14.4k	52.0	60.0	75.5	85.5	75.5	85.5	70	80
048	1	208-230/1/60	10.8k	14.4k	52.0	60.0	75.5	85.5	75.5	85.5	70	80
060	1	208-230/1/60	10.8k	14.4k	52.0	60.0	76.4	86.4	76.4	86.4	70	80
070	1	208-230/1/60	10.8k	14.4k	52.0	60.0	76.4	86.4	76.4	86.4	70	80

Electrical Data - Constant Airflow ECM Blower Motor - 20 kW

Model Number	Voltage Code	Voltage/ Hz/ Phase	Electric Heat + Blower						2nd Data Plate			
			Heater WATTS		Heater AMPS		MCA (W/Blower)		208V MCA	240V MCA	208V MOP (Max Fuse)	240V MOP (Max Fuse)
			208	240	208	240	208	240				
048	1	208-230/1/60	14.4k	19.2k	69.3	80.0	97.2	110.5	97.2	110.5	90	110
060	1	208-230/1/60	14.4k	19.2k	69.3	80.0	98.0	111.4	98.0	111.4	90	110
070	1	208-230/1/60	14.4k	19.2k	69.3	80.0	98.0	111.4	98.0	111.4	90	110

Bosch Thermotechnology Corp. reserves the right to make changes without notice due to continuing engineering and technological advances | BTC 771608301 C | 09.2026

Blower Performance CFM - Vertical Unit w/ Constant Torque Motor

Model Number	Fan Speed	Default Factory Motor Setting	External Static Pressure (in. of Water)											
			0.10	0.20	0.30	0.40	0.50	0.60	0.70	0.80	0.90	1.00	1.10	1.20
024	1		731	661	624	588	549	520	483	453	-	-	-	-
	2	DH	862	810	755	714	680	656	616	591	-	-	-	-
	3	PL	822	757	709	669	637	615	574	540	-	-	-	-
	4	FL	980	939	882	834	796	775	742	715	-	-	-	-
	5		1138	1104	1064	1010	958	918	886	849	-	-	-	-
036	1		1245	1115	990	946	884	834	780	714	669	620	-	-
	2	DH	1328	1216	1179	1137	1095	1056	1010	958	911	850	-	-
	3	PL	1269	1146	1055	1017	969	908	861	804	744	705	-	-
	4	FL	1440	1402	1368	1331	1298	1270	1236	1198	1157	1110	-	-
	5		1517	1482	1451	1418	1385	1353	1322	1288	1251	1211	-	-
048	1		1695	1542	1374	1221	1175	1119	1068	989	900	839	-	-
	2	DH	1804	1667	1531	1488	1453	1417	1373	1330	1286	1243	-	-
	3	PL	1749	1603	1450	1349	1304	1265	1220	1176	1118	1031	-	-
	4	FL	1920	1810	1770	1735	1698	1662	1623	1586	1549	1510	-	-
	5		1996	1945	1913	1873	1838	1805	1769	1730	1694	1659	-	-
060	1		1778	1624	1524	1480	1434	1372	1311	1158	1107	1057	998	961
	2	DH	1908	1868	1831	1795	1747	1706	1662	1618	1564	1437	1355	1294
	3	PL	1857	1766	1726	1687	1634	1592	1550	1502	1345	1283	1229	1165
	4	FL	2181	2144	2109	2072	2031	1997	1962	1924	1876	1833	1790	1747
	5		2373	2339	2303	2268	2235	2199	2166	2129	2088	2047	2008	1967
070	1		1818	1689	1636	1593	1534	1485	1439	1289	1242	1179	1127	1078
	2	DH	2069	2023	1982	1947	1909	1854	1820	1780	1730	1683	1639	1475
	3	PL	2012	1968	1918	1879	1840	1795	1751	1714	1670	1608	1456	1411
	4	FL	2349	2305	2270	2231	2201	2166	2122	2082	2045	2006	1954	1914
	5		2527	2491	2456	2421	2384	2346	2314	2274	2233	2195	2149	2107

Notes: Off delay = 30 seconds = After receiving an off command motor will continue running for 30 seconds.
DH = Dehumidification.
PL = Part Load.
FL = Full Load.

Bosch Thermotechnology Corp. reserves the right to make changes without notice due to continuing engineering and technological advances | BTC 771608301 C | 09.2026

Blower Performance CFM - Horizontal Unit w/ Constant Torque Motor

Model Number	Fan Speed	Default Factory Motor Setting	External Static Pressure (in. of Water)											
			0.10	0.20	0.30	0.40	0.50	0.60	0.70	0.80	0.90	1.00	1.10	1.20
024	1		827	799	754	682	657	640	597	569	-	-	-	-
	2	DH	981	943	916	879	812	780	758	741	-	-	-	-
	3	PL	959	928	886	862	797	754	735	704	-	-	-	-
	4	FL	1064	1024	1010	970	950	901	834	819	-	-	-	-
	5		1162	1132	1103	1079	1047	1021	974	901	-	-	-	-
036	1		1108	1068	1023	958	899	851	801	769	736	699	-	-
	2	DH	1286	1245	1206	1168	1125	1064	1002	956	922	883	-	-
	3	PL	1164	1111	1069	1021	958	902	864	818	783	754	-	-
	4	FL	1444	1398	1359	1328	1293	1255	1202	1149	1093	1051	-	-
	5		1525	1488	1452	1418	1379	1340	1295	1244	1196	1155	-	-
048	1		1394	1305	1260	1212	1151	1112	1054	990	934	862	-	-
	2	DH	1615	1575	1534	1497	1457	1419	1378	1338	1289	1232	-	-
	3	PL	1483	1442	1403	1344	1299	1264	1219	1163	1105	1051	-	-
	4	FL	1838	1806	1774	1740	1704	1666	1628	1586	1547	1506	-	-
	5		1936	1903	1871	1837	1804	1769	1731	1693	1653	1613	-	-
060	1		1597	1563	1526	1473	1430	1373	1326	1244	1157	1112	1067	1027
	2	DH	1882	1856	1828	1786	1751	1713	1667	1628	1586	1519	1438	1360
	3	PL	1788	1761	1720	1684	1647	1598	1560	1520	1458	1385	1295	1238
	4	FL	2137	2117	2084	2055	2027	1995	1953	1916	1876	1831	1787	1737
	5		2319	2300	2269	2243	2219	2183	2155	2118	2080	2038	1997	1933
070	1		1637	1611	1567	1538	1502	1449	1414	1368	1295	1200	1146	1107
	2	DH	1948	1922	1896	1860	1831	1798	1757	1722	1686	1645	1589	1531
	3	PL	1859	1831	1799	1770	1734	1699	1664	1622	1578	1534	1480	1367
	4	FL	2234	2213	2191	2160	2133	2103	2077	2039	2005	1970	1930	1884
	5		2455	2436	2414	2387	2358	2332	2300	2271	2238	2195	2139	2057

Notes: Off delay = 30 seconds = After receiving an off command motor will continue running for 30 seconds.
DH = Dehumidification.
PL = Part Load.
FL = Full Load.

Bosch Thermotechnology Corp. reserves the right to make changes without notice due to continuing engineering and technological advances | BTC 771608301 C | 09.2026

Blower Performance CFM - Vertical Unit w/ Constant Airflow Motor

Model Number	Fan Speed	Default Factory Motor Setting	External Static Pressure (in. of Water)											
			0.10	0.20	0.30	0.40	0.50	0.60	0.70	0.80	0.90	1.00	1.10	1.20
024	A -		680	680	680	680	680	680	680	680	-	-	-	-
	A Norm (Full)	X	800	800	800	800	800	800	800	800	-	-	-	-
	A +		920	920	920	920	920	920	920	920	-	-	-	-
	A -		553	553	553	553	553	553	553	553	-	-	-	-
	A Norm (Part)	X	650	650	650	650	650	650	650	650	-	-	-	-
	A +		748	748	748	748	748	748	748	748	-	-	-	-
036	A -		1105	1105	1105	1105	1105	1105	1105	1105	1105	1105	-	-
	A Norm (Full)	X	1300	1300	1300	1300	1300	1300	1300	1300	1300	1300	-	-
	A +		1495	1495	1495	1495	1495	1495	1495	1495	1495	1495	-	-
	A -		829	829	829	829	829	829	829	829	829	829	-	-
	A Norm (Part)	X	975	975	975	975	975	975	975	975	975	975	-	-
	A +		1121	1121	1121	1121	1121	1121	1121	1121	1121	1121	-	-
048	A -		1445	1445	1445	1445	1445	1445	1445	1445	1445	1445	-	-
	A Norm (Full)	X	1700	1700	1700	1700	1700	1700	1700	1700	1700	1700	-	-
	A +		1955	1955	1955	1955	1955	1955	1955	1955	1955	1955	-	-
	A -		1105	1105	1105	1105	1105	1105	1105	1105	1105	1105	-	-
	A Norm (Part)	X	1300	1300	1300	1300	1300	1300	1300	1300	1300	1300	-	-
	A +		1495	1495	1495	1495	1495	1495	1495	1495	1495	1495	-	-
060	A -		1700	1700	1700	1700	1700	1700	1700	1700	1700	1700	1700	1700
	A Norm (Full)	X	2000	2000	2000	2000	2000	2000	2000	2000	2000	2000	2000	2000
	A +		2300	2300	2300	2300	2300	2300	2300	2300	2300	2300	2300	2300
	A -		1360	1360	1360	1360	1360	1360	1360	1360	1360	1360	1360	1360
	A Norm (Part)	X	1600	1600	1600	1600	1600	1600	1600	1600	1600	1600	1600	1600
	A +		1840	1840	1840	1840	1840	1840	1840	1840	1840	1840	1840	1840
070	A -		1828	1828	1828	1828	1828	1828	1828	1828	1828	1828	1828	1828
	A Norm (Full)	X	2150	2150	2150	2150	2150	2150	2150	2150	2150	2150	2150	2150
	A +		2473	2473	2473	2473	2473	2473	2473	2473	2473	2473	2473	2473
	A -		1530	1530	1530	1530	1530	1530	1530	1530	1530	1530	1530	1530
	A Norm (Part)	X	1800	1800	1800	1800	1800	1800	1800	1800	1800	1800	1800	1800
	A +		2070	2070	2070	2070	2070	2070	2070	2070	2070	2070	2070	2070

Notes: During fan only operation air flow is 69% of tabulated value.
When passive dehumidification mode is enabled air flow is 85% of tabulated value.

Bosch Thermotechnology Corp.
Londonderry, NH • Watertown, MA • Ft. Lauderdale, FL

Bosch Thermotechnology Corp. reserves the right to make changes without notice due to continuing engineering and technological advances | BTC 771608301 C | 09.2026

Tel: 1-800-283-3787 | www.bosch-homecomfort.us

Blower Performance CFM - Horizontal Unit w/ Constant Airflow Motor

Model Number	Fan Speed	Default Factory Motor Setting	External Static Pressure (in. of Water)											
			0.10	0.20	0.30	0.40	0.50	0.60	0.70	0.80	0.90	1.00	1.10	1.20
024	A -		808	808	808	808	808	808	808	808	-	-	-	-
	A Norm (Full)	X	950	950	950	950	950	950	950	950	-	-	-	-
	A +		1093	1093	1093	1093	1093	1093	1093	1093	-	-	-	-
	A -		680	680	680	680	680	680	680	680	-	-	-	-
	A Norm (Part)	X	800	800	800	800	800	800	800	800	-	-	-	-
	A +		920	920	920	920	920	920	920	920	-	-	-	-
036	A -		1105	1105	1105	1105	1105	1105	1105	1105	1105	1105	-	-
	A Norm (Full)	X	1300	1300	1300	1300	1300	1300	1300	1300	1300	1300	-	-
	A +		1495	1495	1495	1495	1495	1495	1495	1495	1495	1495	-	-
	A -		829	829	829	829	829	829	829	829	829	829	-	-
	A Norm (Part)	X	975	975	975	975	975	975	975	975	975	975	-	-
	A +		1121	1121	1121	1121	1121	1121	1121	1121	1121	1121	-	-
048	A -		1445	1445	1445	1445	1445	1445	1445	1445	1445	1445	-	-
	A Norm (Full)	X	1700	1700	1700	1700	1700	1700	1700	1700	1700	1700	-	-
	A +		1955	1955	1955	1955	1955	1955	1955	1955	1955	1955	-	-
	A -		1105	1105	1105	1105	1105	1105	1105	1105	1105	1105	-	-
	A Norm (Part)	X	1300	1300	1300	1300	1300	1300	1300	1300	1300	1300	-	-
	A +		1495	1495	1495	1495	1495	1495	1495	1495	1495	1495	-	-
060	A -		1700	1700	1700	1700	1700	1700	1700	1700	1700	1700	1700	1700
	A Norm (Full)	X	2000	2000	2000	2000	2000	2000	2000	2000	2000	2000	2000	2000
	A +		2300	2300	2300	2300	2300	2300	2300	2300	2300	2300	2300	2300
	A -		1360	1360	1360	1360	1360	1360	1360	1360	1360	1360	1360	1360
	A Norm (Part)	X	1600	1600	1600	1600	1600	1600	1600	1600	1600	1600	1600	1600
	A +		1840	1840	1840	1840	1840	1840	1840	1840	1840	1840	1840	1840
070	A -		1828	1828	1828	1828	1828	1828	1828	1828	1828	1828	1828	1828
	A Norm (Full)	X	2150	2150	2150	2150	2150	2150	2150	2150	2150	2150	2150	2150
	A +		2473	2473	2473	2473	2473	2473	2473	2473	2473	2473	2473	2473
	A -		1530	1530	1530	1530	1530	1530	1530	1530	1530	1530	1530	1530
	A Norm (Part)	X	1800	1800	1800	1800	1800	1800	1800	1800	1800	1800	1800	1800
	A +		2070	2070	2070	2070	2070	2070	2070	2070	2070	2070	2070	2070

Notes: During fan only operation air flow is 69% of tabulated value.
When passive dehumidification mode is enabled air flow is 85% of tabulated value.

Bosch Thermotechnology Corp.
Londonderry, NH • Watertown, MA • Ft. Lauderdale, FL

Bosch Thermotechnology Corp. reserves the right to make changes without notice due to continuing engineering and technological advances | BTC 771608301 C | 09.2026

Tel: 1-800-283-3787 | www.bosch-homecomfort.us

Physical Data						
Description	Unit	Value				
		024	036	048	060	070
Compressor Type	Qty 1	Scroll	Scroll	Scroll	Scroll	Scroll
Max Water Working Pressure	psig	400	400	400	400	400
Fan Motor & Blower						
Constant Torque Fan Motor (HP)	hp	VT: 0.33 HZ: 0.50	0.75	0.75	1.00	1.00
Constant Airflow Fan Motor (HP)	hp	VT: 0.33 HZ: 0.50	0.75	0.75	1.00	1.00
Blower Wheel Size (Dia. x W)	inch	10x8	11x9	11x9	VT: 12x12 HZ: 11x9	VT: 12x12 HZ: 11x9
Water Connection Size (Includes Economizer Option)						
FPT	inch	0.75	0.75	1.00	1.00	1.00
Coaxial Coil Volume	gal	0.28	0.46	0.46	1.09	1.09
Vertical Cabinet						
Refrigeration Charge (oz)	oz	34.0	45.0	57.0	89.0	89.0
Air Coil Dimensions (H x W)	inch	24x16.5	28x21	36x27	42x27	42x27
Standard Filter - 1" Throwaway (L x H)	inch	19x27	24x30	18x30	24x30 & 18x30	24x30 & 18x30
Optional Filter - 2" MERV 8 or 13 (L x H)	inch	19x27	24x30	18x30	24x30 & 18x30	24x30 & 18x30
Optional Filter - 4" MERV 13 (L x H)	inch	19x27	24x30	18x30	24x30 & 18x30	24x30 & 18x30
Weight - Operating (lbs)	lbs	219	255	324	397	401
Weight - Shipping (lbs)	lbs	243	280	350	424	428
Horizontal Cabinet						
Refrigeration Charge (oz)	oz	31.0	43.0	52.0	94.0	94.0
Air Coil Dimensions (H x W)	inch	16x27.5	18x31	18x42	20x50	20x50
Standard Filter - 1" Throwaway (L x H)	inch	18x30	20x34	20x 20 & 20x24	20x25 (Qty 2)	20x25 (Qty 2)
Optional Filter - 2" MERV 8 or 13 (L x H)	inch	18x30	20x34	20x 20 & 20x24	20x25 (Qty 2)	20x25 (Qty 2)
Optional Filter - 4" MERV 13 (L x H)	inch	18x30	20x34	20x 20 & 20x24	20x25 (Qty 2)	20x25 (Qty 2)
Weight - Operating (lbs)	lbs	213	263	319	366	414
Weight - Shipping (lbs)	lbs	237	288	345	393	441

Bosch Thermotechnology Corp. reserves the right to make changes without notice due to continuing engineering and technological advances | BTC 771608301 C | 09.2026

Horizontal Cabinet Corner Weights										
Configuration			Left Hand Evaporator				Right Hand Evaporator			
Model	Unit	Total	Left Front*	Right Front*	Left Back	Right Back	Left Front*	Right Front*	Left Back	Right Back
024	Lbs	213.4	63.0	63.0	35.8	51.6	63.0	63.0	51.6	35.8
	kg	96.8	28.6	28.6	16.2	23.4	28.6	28.6	23.4	16.2
036	Lbs	262.6	68.8	68.8	69.0	56.0	68.8	68.8	56.0	69.0
	kg	119.1	31.2	31.2	31.3	25.4	31.2	31.2	25.4	31.3
048	Lbs	319.0	94.8	94.8	58.0	71.4	94.8	94.8	71.4	58.0
	kg	144.7	43.0	43.0	26.3	32.4	43.0	43.0	32.4	26.3
060	Lbs	366.2	104.8	104.8	86.2	70.4	104.8	104.8	70.4	86.2
	kg	166.1	47.5	47.5	39.1	31.9	47.5	47.5	31.9	39.1
070	Lbs	414.2	126.4	126.4	69.6	91.8	126.4	126.4	91.8	69.6
	kg	187.9	57.3	57.3	31.6	41.6	57.3	57.3	41.6	31.6

*Front is control box end

Bosch Thermotechnology Corp. reserves the right to make changes without notice due to continuing engineering and technological advances | BTC 771608301 C | 09.2026

Capacity Data 024 (800 CFM) - Full Load

Cooling									Heating							
Entering Fluid Temp (°F)	Water flow (GPM)	Pressure Drop (PSI)	Entering Air Temp DB/WB (°F)	Total Capacity (MBTUH)	Sensible Capacity (MBTUH)	Heat of Rejection (MBTUH)	Power Input (kW)	EER	Entering Fluid Temp (°F)	Water flow (GPM)	Pressure Drop (PSI)	Entering Air Temp (°F)	Total Capacity (MBTUH)	Heat of Absorption (MBTUH)	Power Input (kW)	COP
50	3.0	1.3	75/63	26.3	20.0	29.6	1.2	22.6	30	3.0	1.8	60	15.3	11.8	1.2	3.7
			80/67	27.9	20.5	31.3	1.2	23.8				70	15.2	11.3	1.3	3.3
			85/71	29.7	21.0	33.1	1.2	24.9				80	15.0	10.7	1.5	3.0
	4.5	2.7	75/63	27.2	20.4	30.2	1.1	25.8		4.5	3.4	60	17.1	13.5	1.2	4.0
			80/67	29.0	20.9	32.0	1.1	27.4				70	16.9	12.9	1.4	3.6
			85/71	30.8	21.4	33.9	1.1	29.0				80	16.6	12.2	1.5	3.2
	6.0	4.4	75/63	27.7	20.7	30.5	1.0	27.8		6.0	5.4	60	18.0	14.4	1.3	4.2
			80/67	29.5	21.3	32.4	1.0	29.7				70	17.7	13.6	1.4	3.7
			85/71	31.4	21.6	34.3	1.0	31.6				80	17.3	12.8	1.5	3.3
60	3.0	1.3	75/63	25.3	19.5	28.9	1.3	19.5	40	3.0	1.6	60	17.5	13.9	1.3	4.1
			80/67	26.8	20.0	30.5	1.3	20.5				70	17.3	13.3	1.4	3.7
			85/71	28.4	20.7	32.2	1.3	21.4				80	17.1	12.7	1.5	3.3
	4.5	2.5	75/63	26.1	19.9	29.5	1.2	22.0		4.5	3.2	60	19.6	16.0	1.3	4.5
			80/67	27.8	20.4	31.2	1.2	23.3				70	19.3	15.3	1.4	4.0
			85/71	29.5	21.1	33.0	1.2	24.6				80	19.0	14.5	1.6	3.6
	6.0	4.1	75/63	26.6	20.1	29.8	1.1	23.5		6.0	5.1	60	20.8	17.1	1.3	4.7
			80/67	28.3	20.7	31.6	1.1	25.0				70	20.4	16.3	1.4	4.2
			85/71	30.2	21.2	33.4	1.1	26.6				80	20.0	15.3	1.6	3.7
70	3.0	1.2	75/63	24.2	19.1	28.2	1.4	16.9	50	3.0	1.5	60	19.8	16.1	1.3	4.5
			80/67	25.7	19.7	29.8	1.5	17.7				70	19.6	15.5	1.4	4.1
			85/71	27.3	20.1	31.5	1.5	18.5				80	19.3	14.8	1.6	3.6
	4.5	2.4	75/63	25.0	19.4	28.7	1.3	18.9		4.5	3.0	60	22.4	18.6	1.3	5.0
			80/67	26.6	20.0	30.4	1.3	20.0				70	22.0	17.8	1.4	4.5
			85/71	28.3	20.6	32.2	1.3	21.0				80	21.6	17.0	1.6	4.0
	6.0	3.9	75/63	25.5	19.6	29.0	1.3	20.1		6.0	4.8	60	23.7	19.9	1.3	5.2
			80/67	27.1	20.2	30.8	1.3	21.3				70	23.3	19.1	1.5	4.7
			85/71	28.8	20.8	32.5	1.3	22.6				80	22.8	18.1	1.6	4.1
80	3.0	1.1	75/63	23.0	18.7	27.5	1.6	14.6	60	3.0	1.4	60	22.2	18.5	1.3	5.0
			80/67	24.5	19.2	29.0	1.6	15.3				70	22.0	17.8	1.4	4.5
			85/71	26.0	19.8	30.7	1.6	15.9				80	21.7	17.0	1.6	4.0
	4.5	2.3	75/63	23.9	19.0	28.0	1.5	16.3		4.5	2.8	60	25.2	21.4	1.3	5.5
			80/67	25.4	19.6	29.6	1.5	17.1				70	24.8	20.4	1.5	4.9
			85/71	27.1	20.1	31.3	1.5	18.1				80	24.4	19.6	1.6	4.4
	6.0	3.7	75/63	24.3	19.2	28.3	1.4	17.2		6.0	4.5	60	26.8	22.9	1.4	5.8
			80/67	25.9	19.8	29.9	1.4	18.3				70	26.2	21.9	1.5	5.1
			85/71	27.6	20.3	31.7	1.4	19.3				80	25.7	20.9	1.7	4.5
90	3.0	1.1	75/63	21.9	18.2	26.8	1.8	12.5	70	3.0	1.3	60	24.7	20.9	1.3	5.4
			80/67	23.4	18.7	28.4	1.8	13.1				70	24.4	20.1	1.5	4.8
			85/71	24.8	19.4	29.9	1.8	13.7				80	24.2	19.4	1.6	4.3
	4.5	2.1	75/63	22.7	18.6	27.3	1.6	14.0		4.5	2.6	60	28.2	24.3	1.4	6.0
			80/67	24.2	19.2	28.9	1.6	14.7				70	27.7	23.3	1.5	5.3
			85/71	25.8	19.6	30.5	1.7	15.5				80	27.2	22.3	1.7	4.7
	6.0	3.5	75/63	23.2	18.7	27.5	1.6	14.8		6.0	4.2	60	30.0	26.1	1.4	6.3
			80/67	24.7	19.2	29.2	1.6	15.6				70	29.3	24.9	1.5	5.6
			85/71	26.3	19.9	30.8	1.6	16.5				80	28.8	23.8	1.7	4.9
100	3.0	1.0	75/63	20.8	17.8	26.2	1.9	10.7	80	3.0	1.3	60	27.3	23.5	1.4	5.9
			80/67	22.2	18.4	27.7	2.0	11.3				70	27.0	22.6	1.5	5.2
			85/71	23.6	19.0	29.3	2.0	11.9				80	26.7	21.8	1.7	4.7
	4.5	2.0	75/63	21.6	18.1	26.6	1.8	11.9		4.5	2.5	60	31.3	27.3	1.4	6.5
			80/67	23.1	18.6	28.2	1.8	12.6				70	30.7	26.2	1.6	5.7
			85/71	24.6	19.2	29.8	1.8	13.3				80	30.2	25.2	1.7	5.1
	6.0	3.4	75/63	22.0	18.2	26.8	1.7	12.6		6.0	4.0	60	33.3	29.3	1.4	6.8
			80/67	23.5	18.8	28.4	1.8	13.3				70	32.6	28.1	1.6	6.0
			85/71	25.0	19.4	30.1	1.8	14.1				80	32.0	26.9	1.8	5.3
110	3.0	1.0	75/63	19.7	17.3	25.7	2.1	9.2	90	3.0	1.2	60	30.0	26.1	1.4	6.3
			80/67	21.1	17.8	27.2	2.2	9.7				70	29.6	25.2	1.6	5.6
			85/71	22.4	18.6	28.7	2.2	10.2				80	29.3	24.3	1.7	5.0
	4.5	1.9	75/63	20.4	17.5	26.0	2.0	10.2		4.5	2.3	60	34.4	30.4	1.5	6.9
			80/67	21.8	18.3	27.5	2.0	10.8				70	33.8	29.3	1.6	6.2
			85/71	23.4	18.8	29.1	2.0	11.4				80	33.3	28.2	1.8	5.5
	6.0	3.2	75/63	20.8	17.8	26.2	1.9	10.7		6.0	3.8	60	36.7	32.6	1.5	7.3
			80/67	22.3	18.4	27.7	2.0	11.4				70	36.0	31.4	1.6	6.4
			85/71	23.8	19.1	29.4	2.0	12.1				80	35.2	30.0	1.8	5.7

Extended Range - Anti-freeze required

AHRI/ISO13256-1 certified performance is rated at entering air conditions of 80.6°F DB and 66.2°F WB in cooling and 68°F DB in heating.

Tabulated unit performance does not include fan or pump power corrections required for AHRI/ISO standard performance ratings.

Unit performance may be interpolated. Extrapolation is not allowed.

For conditions other than rating conditions provided, consult the BST selection software.

Ratings below 40°F are with a methanol solution.

DISCLAIMER: The performance reported herein is based on testing by FHP. Variations in the installation and operational environment may alter performance. Bosch disclaims all warranties, express and implied, that the performance will be as reported, including the warranty of merchantability and fitness for purpose. In addition, continuous research and development may result in a change to an appliances design and specifications at the time of order, which Bosch may change without notice. Before purchase, confirm the design specifications of the appliance.

Capacity Data 024 (650 CFM) - Part Load

Cooling									Heating							
Entering Fluid Temp (°F)	Water flow (GPM)	Pressure Drop (PSI)	Entering Air Temp DB/WB (°F)	Total Capacity (MBTUH)	Sensible Capacity (MBTUH)	Heat of Rejection (MBTUH)	Power Input (kW)	EER	Entering Fluid Temp (°F)	Water flow (GPM)	Pressure Drop (PSI)	Entering Air Temp (°F)	Total Capacity (MBTUH)	Heat of Absorption (MBTUH)	Power Input (kW)	COP
50	3.0	1.4	75/63	20.1	15.8	22.0	0.7	28.6	30	3.0	1.7	60	11.5	9.0	0.9	3.6
			80/67	21.3	16.2	23.3	0.7	30.7				70	10.7	7.8	1.0	3.1
			85/71	22.6	16.6	24.6	0.7	32.9				80	9.9	6.9	1.1	2.6
	4.5	2.7	75/63	20.7	16.0	22.5	0.6	32.4		4.5	3.3	60	12.4	9.9	0.9	3.9
			80/67	22.0	16.5	23.8	0.6	35.2				70	11.6	8.7	1.0	3.3
			85/71	23.4	16.9	25.1	0.6	38.1				80	10.9	7.8	1.1	2.8
	6.0	4.4	75/63	21.1	16.2	22.8	0.6	34.8		6.0	5.3	60	12.8	10.3	0.9	4.1
			80/67	22.4	16.6	24.1	0.6	37.9				70	12.0	9.2	1.0	3.5
			85/71	23.8	17.0	25.4	0.6	41.4				80	11.3	8.2	1.1	2.9
60	3.0	1.3	75/63	19.1	15.4	21.3	0.8	23.8	40	3.0	1.6	60	12.8	10.3	0.9	4.1
			80/67	20.3	15.8	22.5	0.8	25.4				70	12.1	9.3	1.0	3.5
			85/71	21.6	16.2	23.8	0.8	27.1				80	11.5	8.4	1.1	3.0
	4.5	2.5	75/63	19.7	15.6	21.8	0.7	26.6		4.5	3.1	60	13.9	11.5	0.9	4.5
			80/67	21.0	16.1	23.0	0.7	28.7				70	13.3	10.4	1.0	3.8
			85/71	22.3	16.4	24.3	0.7	30.9				80	12.7	9.6	1.1	3.3
	6.0	4.2	75/63	20.1	15.7	22.0	0.7	28.3		6.0	5.0	60	14.4	12.0	0.9	4.7
			80/67	21.3	16.2	23.3	0.7	30.7				70	13.8	11.0	1.0	4.0
			85/71	22.7	16.6	24.6	0.7	33.3				80	13.2	10.2	1.1	3.4
70	3.0	1.2	75/63	18.2	14.9	20.6	0.9	19.9	50	3.0	1.5	60	14.3	11.8	0.9	4.6
			80/67	19.3	15.4	21.8	0.9	21.2				70	13.8	10.9	1.0	4.0
			85/71	20.5	15.8	23.0	0.9	22.6				80	13.2	10.0	1.1	3.4
	4.5	2.4	75/63	18.8	15.1	21.0	0.8	22.1		4.5	2.9	60	15.6	13.2	0.9	5.1
			80/67	20.0	15.6	22.2	0.8	23.7				70	15.1	12.3	1.0	4.4
			85/71	21.2	16.1	23.5	0.8	25.4				80	14.5	11.3	1.1	3.8
	6.0	3.9	75/63	19.1	15.3	21.2	0.8	23.4		6.0	4.7	60	16.3	13.9	0.9	5.3
			80/67	20.3	15.7	22.5	0.8	25.2				70	15.7	12.9	1.0	4.6
			85/71	21.6	16.3	23.8	0.8	27.2				80	15.1	11.9	1.1	3.9
80	3.0	1.1	75/63	17.2	14.6	19.9	1.0	16.6	60	3.0	1.4	60	15.9	13.5	0.9	5.1
			80/67	18.3	15.0	21.1	1.0	17.8				70	15.4	12.6	1.0	4.5
			85/71	19.4	15.5	22.2	1.0	18.9				80	14.9	11.7	1.1	3.9
	4.5	2.3	75/63	17.8	14.7	20.3	1.0	18.4		4.5	2.7	60	17.5	15.0	0.9	5.7
			80/67	18.9	15.3	21.5	1.0	19.7				70	17.0	14.2	1.0	4.9
			85/71	20.1	15.8	22.7	1.0	21.1				80	16.5	13.3	1.1	4.3
	6.0	3.7	75/63	18.0	14.8	20.5	0.9	19.4		6.0	4.4	60	18.3	15.9	0.9	6.0
			80/67	19.2	15.4	21.7	0.9	20.8				70	17.8	15.0	1.0	5.2
			85/71	20.5	15.8	23.0	0.9	22.4				80	17.2	14.0	1.1	4.5
90	3.0	1.1	75/63	16.2	14.1	19.2	1.2	13.9	70	3.0	1.3	60	17.6	15.1	0.9	5.8
			80/67	17.3	14.7	20.3	1.2	14.9				70	17.2	14.4	1.0	5.0
			85/71	18.4	15.2	21.5	1.2	15.8				80	16.8	13.5	1.1	4.4
	4.5	2.2	75/63	16.7	14.4	19.6	1.1	15.3		4.5	2.6	60	19.5	17.1	0.9	6.5
			80/67	17.8	14.9	20.7	1.1	16.4				70	19.0	16.2	1.0	5.5
			85/71	19.0	15.3	21.9	1.1	17.6				80	18.5	15.3	1.1	4.8
	6.0	3.6	75/63	17.0	14.5	19.8	1.1	16.1		6.0	4.2	60	20.5	18.1	0.9	6.8
			80/67	18.2	14.9	20.9	1.0	17.3				70	19.9	17.1	1.0	5.8
			85/71	19.4	15.4	22.2	1.0	18.6				80	19.3	16.1	1.1	5.0
100	3.0	1.0	75/63	15.3	13.8	18.7	1.3	11.7	80	3.0	1.2	60	19.5	17.0	0.9	6.4
			80/67	16.2	14.3	19.6	1.3	12.4				70	19.0	16.2	1.0	5.6
			85/71	17.3	14.8	20.8	1.3	13.2				80	18.6	15.4	1.1	4.8
	4.5	2.1	75/63	15.7	13.9	18.9	1.2	12.7		4.5	2.4	60	21.6	19.3	0.9	7.2
			80/67	16.8	14.5	20.0	1.2	13.6				70	21.1	18.3	1.0	6.2
			85/71	17.9	14.9	21.2	1.2	14.6				80	20.5	17.4	1.1	5.3
	6.0	3.4	75/63	15.9	14.1	19.1	1.2	13.3		6.0	4.0	60	22.7	20.3	0.9	7.6
			80/67	17.1	14.6	20.2	1.2	14.3				70	22.1	19.4	1.0	6.5
			85/71	18.2	15.1	21.4	1.2	15.4				80	21.4	18.3	1.1	5.6
110	3.0	1.0	75/63	14.3	13.4	18.1	1.5	9.8	90	3.0	1.2	60	21.3	18.9	0.9	7.1
			80/67	15.2	13.9	19.0	1.5	10.4				70	20.9	18.1	1.0	6.1
			85/71	16.2	14.4	20.1	1.5	11.1				80	19.7	16.5	1.1	5.1
	4.5	2.0	75/63	14.7	13.6	18.3	1.4	10.6		4.5	2.3	60	22.9	20.6	0.9	7.6
			80/67	15.7	14.1	19.3	1.4	11.3				70	22.3	19.6	1.0	6.5
			85/71	16.8	14.6	20.4	1.4	12.2				80	21.7	18.6	1.1	5.6
	6.0	3.2	75/63	15.0	13.7	18.5	1.4	11.1		6.0	3.8	60	24.0	21.7	0.9	8.0
			80/67	16.0	14.1	19.5	1.3	11.9				70	23.4	20.7	1.0	6.9
			85/71	17.1	14.7	20.6	1.3	12.8				80	22.7	19.6	1.1	5.9

Extended Range - Anti-freeze required

AHRI/ISO13256-1 certified performance is rated at entering air conditions of 80.6°F DB and 66.2°F WB in cooling and 68°F DB in heating.

Tabulated unit performance does not include fan or pump power corrections required for AHRI/ISO standard performance ratings.

Unit performance may be interpolated. Extrapolation is not allowed.

For conditions other than rating conditions provided, consult the BST selection software.

Ratings below 40°F are with a methanol solution.

DISCLAIMER: The performance reported herein is based on testing by FHP. Variations in the installation and operational environment may alter performance. Bosch disclaims all warranties, express and implied, that the performance will be as reported, including the warranty of merchantability and fitness for purpose. In addition, continuous research and development may result in a change to an appliances design and specifications at the time of order, which Bosch may change without notice. Before purchase, confirm the design specifications of the appliance.

Capacity Data 036 (1300 CFM) - Full Load

Cooling									Heating							
Entering Fluid Temp (°F)	Water flow (GPM)	Pressure Drop (PSI)	Entering Air Temp DB/WB (°F)	Total Capacity (MBTUH)	Sensible Capacity (MBTUH)	Heat of Rejection (MBTUH)	Power Input (kW)	EER	Entering Fluid Temp (°F)	Water flow (GPM)	Pressure Drop (PSI)	Entering Air Temp (°F)	Total Capacity (MBTUH)	Heat of Absorption (MBTUH)	Power Input (kW)	COP
50	4.5	1.0	75/63	40.4	31.4	45.7	1.8	22.8	30	4.5	1.3	60	27.1	21.5	1.9	4.2
			80/67	42.9	32.7	48.4	1.8	23.9				70	26.8	20.5	2.1	3.8
			85/71	45.9	33.6	51.5	1.8	25.3				80	26.6	19.5	2.3	3.4
	7.0	1.9	75/63	41.6	32.2	46.6	1.6	25.3		7.0	2.5	60	29.3	23.5	1.9	4.5
			80/67	44.5	33.3	49.6	1.7	26.8				70	28.8	22.2	2.1	4.0
			85/71	47.3	34.6	52.5	1.7	28.4				80	28.5	21.2	2.3	3.6
	9.0	3.1	75/63	42.2	32.5	47.0	1.6	26.8		9.0	4.0	60	30.2	24.3	1.9	4.6
			80/67	45.2	33.6	50.1	1.6	28.5				70	29.6	23.2	2.1	4.1
			85/71	48.4	34.5	53.4	1.6	30.3				80	29.6	22.0	2.4	3.7
60	4.5	0.9	75/63	38.8	30.8	44.6	1.9	20.1	40	4.5	1.2	60	30.7	24.8	1.9	4.6
			80/67	41.2	31.9	47.2	2.0	21.0				70	30.4	23.9	2.1	4.2
			85/71	44.1	32.9	50.1	2.0	22.3				80	30.1	22.9	2.4	3.7
	7.0	1.8	75/63	39.9	31.5	45.4	1.8	22.2		7.0	2.3	60	33.6	27.5	2.0	5.0
			80/67	42.7	32.6	48.3	1.8	23.5				70	32.9	26.3	2.2	4.4
			85/71	45.8	33.5	51.4	1.8	25.0				80	32.4	25.0	2.4	3.9
	9.0	3.0	75/63	40.4	32.0	45.7	1.7	23.3		9.0	3.7	60	34.8	28.5	2.0	5.1
			80/67	43.4	32.9	48.8	1.7	24.9				70	34.1	27.3	2.2	4.5
			85/71	46.5	33.9	51.9	1.8	26.6				80	33.4	26.0	2.4	4.0
70	4.5	0.9	75/63	36.9	30.6	43.3	2.1	17.4	50	4.5	1.1	60	34.6	28.7	2.0	5.1
			80/67	39.4	31.6	45.9	2.1	18.4				70	34.2	27.5	2.2	4.5
			85/71	41.8	33.0	48.5	2.2	19.4				80	33.9	26.4	2.4	4.1
	7.0	1.7	75/63	38.3	30.9	44.2	2.0	19.4		7.0	2.2	60	38.1	32.0	2.1	5.4
			80/67	41.0	31.8	47.0	2.0	20.6				70	37.4	30.5	2.3	4.8
			85/71	43.9	32.9	50.0	2.0	21.9				80	36.8	29.3	2.5	4.3
	9.0	2.8	75/63	39.0	31.1	44.7	1.9	20.5		9.0	3.5	60	39.5	33.4	2.1	5.6
			80/67	41.5	32.4	47.4	1.9	21.7				70	38.8	31.9	2.3	5.0
			85/71	44.6	33.2	50.5	1.9	23.3				80	38.1	30.5	2.5	4.5
80	4.5	0.8	75/63	35.5	29.6	42.4	2.3	15.3	60	4.5	1.1	60	38.7	32.6	2.1	5.5
			80/67	36.9	31.4	44.3	2.3	15.8				70	38.3	31.5	2.3	4.9
			85/71	38.0	32.2	45.9	2.3	16.2				80	37.9	30.3	2.5	4.4
	7.0	1.6	75/63	36.6	30.1	43.1	2.2	16.9		7.0	2.1	60	42.8	36.5	2.1	5.9
			80/67	39.2	31.2	45.8	2.2	17.9				70	42.1	35.3	2.3	5.3
			85/71	41.1	33.2	48.1	2.2	18.8				80	41.5	33.8	2.6	4.8
	9.0	2.7	75/63	37.3	30.4	43.6	2.1	17.8		9.0	3.3	60	44.7	38.4	2.2	6.1
			80/67	39.7	31.7	46.1	2.1	18.9				70	43.8	36.9	2.4	5.5
			85/71	42.7	32.4	49.1	2.1	20.3				80	43.1	35.4	2.6	4.9
90	4.5	0.8	75/63	33.3	29.6	41.1	2.6	13.0	70	4.5	1.0	60	43.0	36.8	2.1	5.9
			80/67	34.8	30.6	43.0	2.6	13.5				70	42.5	35.6	2.3	5.3
			85/71	35.4	31.3	44.3	2.6	13.7				80	42.1	34.4	2.6	4.8
	7.0	1.5	75/63	34.5	30.1	41.8	2.4	14.4		7.0	1.9	60	47.8	41.4	2.2	6.4
			80/67	37.4	30.6	44.6	2.4	15.5				70	47.1	40.0	2.4	5.8
			85/71	37.3	31.9	45.5	2.4	15.5				80	46.4	38.5	2.6	5.2
	9.0	2.5	75/63	35.6	29.7	42.5	2.3	15.4		9.0	3.2	60	50.3	43.4	2.2	6.7
			80/67	38.3	30.4	45.2	2.3	16.5				70	49.2	42.1	2.4	6.0
			85/71	37.8	32.1	45.8	2.3	16.4				80	48.3	40.4	2.7	5.3
100	4.5	0.7	75/63	31.6	28.9	40.2	2.8	11.2	80	4.5	0.9	60	47.5	41.3	2.2	6.4
			80/67	35.8	26.2	43.7	2.9	12.4				70	47.0	40.0	2.4	5.8
			85/71	34.5	31.0	44.0	2.9	12.1				80	46.5	38.7	2.6	5.2
	7.0	1.5	75/63	34.1	27.3	41.6	2.7	12.8		7.0	1.8	60	53.0	46.7	2.3	6.9
			80/67	36.8	27.3	44.3	2.7	13.8				70	52.2	45.0	2.5	6.2
			85/71	35.7	31.4	44.6	2.7	13.4				80	51.5	43.4	2.7	5.6
	9.0	2.4	75/63	33.3	29.6	41.1	2.6	13.0		9.0	3.0	60	55.9	49.0	2.3	7.2
			80/67	35.7	30.9	43.6	2.6	13.9				70	54.9	47.1	2.5	6.5
			85/71	36.4	31.6	45.0	2.6	14.2				80	53.7	45.6	2.7	5.8
110	4.5	0.7	75/63	30.4	27.9	39.8	3.1	9.7	90	4.5	0.9	60	52.3	46.0	2.2	6.8
			80/67	31.7	29.5	41.6	3.2	10.0				70	51.6	44.5	2.5	6.2
			85/71	32.9	30.5	43.3	3.2	10.4				80	51.1	43.1	2.7	5.6
	7.0	1.4	75/63	31.2	28.7	40.0	2.9	10.6		7.0	1.7	60	58.4	52.0	2.3	7.4
			80/67	33.0	29.9	42.2	3.0	11.2				70	57.5	50.3	2.5	6.7
			85/71	33.9	30.8	43.8	3.0	11.5				80	56.7	48.5	2.8	6.0
	9.0	2.3	75/63	31.6	28.9	40.2	2.8	11.1		9.0	2.8	60	61.8	54.7	2.4	7.7
			80/67	35.8	26.4	43.8	2.9	12.5				70	60.3	53.3	2.6	6.9
			85/71	34.7	31.1	44.2	2.8	12.2				80	59.3	51.0	2.8	6.2

Extended Range - Anti-freeze required

AHRI/ISO13256-1 certified performance is rated at entering air conditions of 80.6°F DB and 66.2°F WB in cooling and 68°F DB in heating.

Tabulated unit performance does not include fan or pump power corrections required for AHRI/ISO standard performance ratings.

Unit performance may be interpolated. Extrapolation is not allowed.

For conditions other than rating conditions provided, consult the BST selection software.

Ratings below 40°F are with a methanol solution.

DISCLAIMER: The performance reported herein is based on testing by FHP. Variations in the installation and operational environment may alter performance. Bosch disclaims all warranties, express and implied, that the performance will be as reported, including the warranty of merchantability and fitness for purpose. In addition, continuous research and development may result in a change to an appliances design and specifications at the time of order, which Bosch may change without notice. Before purchase, confirm the design specifications of the appliance.

Capacity Data 036 (970 CFM) - Part Load

Cooling									Heating							
Entering Fluid Temp (°F)	Water flow (GPM)	Pressure Drop (PSI)	Entering Air Temp DB/WB (°F)	Total Capacity (MBTUH)	Sensible Capacity (MBTUH)	Heat of Rejection (MBTUH)	Power Input (kW)	EER	Entering Fluid Temp (°F)	Water flow (GPM)	Pressure Drop (PSI)	Entering Air Temp (°F)	Total Capacity (MBTUH)	Heat of Absorption (MBTUH)	Power Input (kW)	COP
50	4.5	1.0	75/63	30.9	24.1	34.0	1.0	29.7	30	4.5	1.3	60	20.5	16.6	1.4	4.4
			80/67	32.9	24.8	36.0	1.0	31.8				70	19.7	15.5	1.5	3.8
			85/71	34.9	25.5	38.0	1.0	33.9				80	18.6	13.7	1.7	3.2
	7.0	1.9	75/63	31.9	24.5	34.7	0.9	33.6		7.0	2.4	60	21.7	17.7	1.4	4.6
			80/67	33.8	25.2	36.6	0.9	36.2				70	20.8	16.3	1.5	4.0
			85/71	36.0	25.9	38.8	0.9	39.3				80	19.8	14.9	1.7	3.4
	9.0	3.2	75/63	32.3	24.6	35.0	0.9	35.8		9.0	3.9	60	22.3	18.5	1.4	4.8
			80/67	34.4	25.4	37.1	0.9	39.1				70	21.3	16.9	1.5	4.1
			85/71	36.6	26.0	39.2	0.9	42.5				80	20.4	15.2	1.7	3.5
60	4.5	0.9	75/63	29.5	23.5	33.0	1.2	24.7	40	4.5	1.2	60	22.9	19.0	1.4	4.9
			80/67	31.4	24.2	34.9	1.2	26.4				70	22.1	17.7	1.5	4.2
			85/71	33.4	25.0	36.9	1.2	28.0				80	21.4	16.4	1.7	3.7
	7.0	1.8	75/63	30.4	23.8	33.6	1.1	27.6		7.0	2.3	60	24.7	21.0	1.4	5.3
			80/67	32.5	24.5	35.7	1.1	29.8				70	23.6	19.3	1.5	4.5
			85/71	34.5	25.3	37.7	1.1	31.9				80	22.9	17.8	1.7	3.9
	9.0	3.0	75/63	30.8	24.0	33.9	1.1	29.2		9.0	3.7	60	25.3	21.4	1.4	5.4
			80/67	32.9	24.8	36.0	1.0	31.7				70	24.3	20.1	1.5	4.6
			85/71	35.0	25.5	38.1	1.0	34.2				80	23.5	18.6	1.7	4.0
70	4.5	0.9	75/63	28.0	23.1	32.0	1.4	20.6	50	4.5	1.1	60	25.8	22.1	1.4	5.5
			80/67	30.0	23.7	33.9	1.4	22.0				70	25.0	20.5	1.5	4.8
			85/71	32.0	24.3	36.0	1.4	23.4				80	24.3	19.3	1.7	4.1
	7.0	1.7	75/63	29.0	23.3	32.6	1.3	22.9		7.0	2.1	60	27.7	23.7	1.4	5.9
			80/67	30.9	24.0	34.6	1.3	24.6				70	26.8	22.4	1.5	5.1
			85/71	32.9	24.7	36.6	1.3	26.3				80	26.1	21.1	1.7	4.4
	9.0	2.8	75/63	29.4	23.4	32.9	1.2	24.1		9.0	3.5	60	28.7	24.8	1.4	6.1
			80/67	31.3	24.2	34.9	1.2	26.0				70	27.9	23.6	1.6	5.3
			85/71	33.5	24.8	37.0	1.2	28.1				80	27.0	21.9	1.7	4.6
80	4.5	0.8	75/63	26.7	22.3	31.1	1.5	17.3	60	4.5	1.0	60	28.8	25.1	1.4	6.1
			80/67	28.8	22.6	33.1	1.5	18.6				70	28.0	23.6	1.6	5.3
			85/71	29.1	24.3	34.1	1.5	18.9				80	27.4	22.4	1.7	4.6
	7.0	1.6	75/63	27.5	22.7	31.6	1.4	19.1		7.0	2.0	60	31.1	27.6	1.4	6.6
			80/67	29.5	23.2	33.6	1.4	20.5				70	30.3	25.8	1.6	5.7
			85/71	31.9	23.0	35.8	1.4	22.2				80	29.6	24.6	1.8	4.9
	9.0	2.7	75/63	27.9	22.8	31.8	1.4	20.0		9.0	3.3	60	32.3	28.6	1.4	6.8
			80/67	29.8	23.6	33.8	1.4	21.6				70	31.4	27.1	1.6	5.9
			85/71	32.0	24.0	35.9	1.4	23.2				80	30.7	25.6	1.8	5.1
90	4.5	0.8	75/63	25.3	21.8	30.2	1.7	14.5	70	4.5	1.0	60	32.0	28.4	1.4	6.7
			80/67	26.8	23.0	31.9	1.7	15.3				70	31.3	26.8	1.6	5.8
			85/71	27.1	23.6	32.8	1.7	15.5				80	30.7	25.6	1.8	5.1
	7.0	1.6	75/63	25.8	22.4	30.5	1.6	15.8		7.0	1.9	60	34.7	31.3	1.4	7.2
			80/67	27.8	23.0	32.5	1.6	17.0				70	34.0	29.5	1.6	6.3
			85/71	30.6	21.6	34.9	1.6	18.7				80	33.3	28.2	1.8	5.5
	9.0	2.6	75/63	26.4	22.2	30.9	1.6	16.7		9.0	3.1	60	36.2	32.5	1.4	7.5
			80/67	28.0	23.4	32.6	1.6	17.8				70	35.3	31.2	1.6	6.5
			85/71	29.0	24.2	34.0	1.6	18.4				80	34.5	29.7	1.8	5.7
100	4.5	0.7	75/63	23.9	21.1	29.5	2.0	12.2	80	4.5	0.9	60	35.4	31.5	1.4	7.3
			80/67	25.3	22.5	31.0	2.0	12.8				70	34.7	30.3	1.6	6.4
			85/71	28.4	19.5	33.5	2.0	14.4				80	34.2	29.1	1.8	5.6
	7.0	1.5	75/63	24.6	21.4	29.8	1.9	13.3		7.0	1.8	60	38.6	34.8	1.4	7.9
			80/67	25.9	22.8	31.4	1.9	14.0				70	37.8	33.3	1.6	6.9
			85/71	27.2	23.6	32.9	1.9	14.7				80	37.1	31.9	1.8	6.0
	9.0	2.5	75/63	24.9	21.6	30.0	1.8	13.9		9.0	2.9	60	40.3	36.6	1.4	8.2
			80/67	26.2	22.9	31.5	1.8	14.6				70	39.5	35.0	1.6	7.1
			85/71	27.5	23.7	33.1	1.8	15.4				80	38.6	33.6	1.8	6.2
110	4.5	0.7	75/63	22.5	20.5	28.7	2.2	10.1	90	4.5	0.9	60	38.9	35.1	1.4	8.0
			80/67	24.1	21.5	30.4	2.2	10.8				70	38.2	33.8	1.6	7.0
			85/71	24.7	22.8	31.6	2.2	11.1				80	37.6	32.5	1.8	6.1
	7.0	1.4	75/63	23.1	21.0	29.0	2.1	11.0		7.0	1.7	60	42.6	38.7	1.5	8.5
			80/67	24.8	21.7	30.8	2.1	11.8				70	41.7	37.2	1.6	7.4
			85/71	27.5	19.7	33.0	2.1	13.2				80	40.8	35.6	1.8	6.5
	9.0	2.3	75/63	23.4	21.1	29.2	2.0	11.5		9.0	2.8	60	44.6	40.6	1.5	8.8
			80/67	25.2	21.8	31.0	2.0	12.4				70	43.5	39.0	1.7	7.6
			85/71	25.8	23.1	32.1	2.0	12.7				80	42.6	37.5	1.9	6.7

Extended Range - Anti-freeze required

AHRI/ISO13256-1 certified performance is rated at entering air conditions of 80.6°F DB and 66.2°F WB in cooling and 68°F DB in heating.

Tabulated unit performance does not include fan or pump power corrections required for AHRI/ISO standard performance ratings.

Unit performance may be interpolated. Extrapolation is not allowed.

For conditions other than rating conditions provided, consult the BST selection software.

Ratings below 40°F are with a methanol solution.

DISCLAIMER: The performance reported herein is based on testing by FHP. Variations in the installation and operational environment may alter performance. Bosch disclaims all warranties, express and implied, that the performance will be as reported, including the warranty of merchantability and fitness for purpose. In addition, continuous research and development may result in a change to an appliances design and specifications at the time of order, which Bosch may change without notice. Before purchase, confirm the design specifications of the appliance.

Capacity Data 048 (1675 CFM) - Full Load

Cooling									Heating							
Entering Fluid Temp (°F)	Water flow (GPM)	Pressure Drop (PSI)	Entering Air Temp DB/WB (°F)	Total Capacity (MBTUH)	Sensible Capacity (MBTUH)	Heat of Rejection (MBTUH)	Power Input (kW)	EER	Entering Fluid Temp (°F)	Water flow (GPM)	Pressure Drop (PSI)	Entering Air Temp (°F)	Total Capacity (MBTUH)	Heat of Absorption (MBTUH)	Power Input (kW)	COP
50	6.0	1.3	75/63	53.3	41.4	60.2	2.3	23.4	30	6.0	1.8	60	35.4	28.3	2.3	4.6
			80/67	56.6	43.1	63.7	2.3	24.4				70	34.6	26.9	2.5	4.0
			85/71	60.5	43.8	67.8	2.4	25.4				80	35.1	26.4	2.8	3.7
	9.0	2.7	75/63	54.8	42.5	61.1	2.1	26.6		9.0	3.6	60	37.2	30.1	2.3	4.7
			80/67	58.7	43.4	65.2	2.1	27.8				70	37.8	28.9	2.6	4.3
			85/71	62.7	44.8	69.4	2.2	29.0				80	37.5	28.8	2.8	3.9
	12.0	4.5	75/63	55.9	42.4	61.9	2.0	28.4		12.0	5.8	60	38.3	31.2	2.3	4.8
			80/67	59.8	44.0	65.9	2.0	29.9				70	39.1	31.4	2.6	4.4
			85/71	63.6	45.5	70.0	2.0	31.2				80	39.1	30.1	2.9	4.0
60	6.0	1.3	75/63	51.0	40.8	58.6	2.5	20.4	40	6.0	1.7	60	40.1	33.1	2.3	5.0
			80/67	54.4	42.3	62.2	2.5	21.4				70	39.5	31.6	2.6	4.5
			85/71	58.2	43.1	66.2	2.6	22.3				80	39.4	30.3	2.9	4.0
	9.0	2.6	75/63	52.7	41.6	59.7	2.3	22.8		9.0	3.4	60	42.6	35.6	2.4	5.2
			80/67	56.5	42.6	63.6	2.4	24.0				70	42.2	34.4	2.6	4.7
			85/71	60.4	43.9	67.7	2.4	25.2				80	40.9	31.7	2.9	4.1
	12.0	4.3	75/63	53.8	41.5	60.5	2.2	24.3		12.0	5.4	60	44.1	36.9	2.4	5.4
			80/67	57.6	43.1	64.4	2.2	25.7				70	44.0	35.1	2.7	4.8
			85/71	61.3	44.7	68.4	2.3	26.9				80	42.1	33.1	2.9	4.2
70	6.0	1.2	75/63	49.1	39.7	57.3	2.8	17.8	50	6.0	1.6	60	45.4	38.3	2.4	5.5
			80/67	52.4	41.0	60.8	2.8	18.7				70	44.7	36.7	2.7	4.9
			85/71	55.5	43.0	64.3	2.8	19.5				80	44.1	35.1	3.0	4.4
	9.0	2.5	75/63	50.7	40.4	58.4	2.6	19.8		9.0	3.2	60	48.6	41.2	2.5	5.8
			80/67	54.3	41.6	62.1	2.6	21.0				70	47.7	39.4	2.7	5.1
			85/71	58.0	43.0	66.0	2.6	22.1				80	47.3	38.3	3.0	4.6
	12.0	4.1	75/63	51.7	40.7	59.0	2.5	21.0		12.0	5.1	60	50.4	43.2	2.5	5.9
			80/67	55.3	42.2	62.8	2.5	22.3				70	49.4	41.2	2.8	5.2
			85/71	58.9	43.8	66.6	2.5	23.4				80	49.0	38.9	3.0	4.7
80	6.0	1.2	75/63	47.0	38.8	56.0	3.0	15.6	60	6.0	1.5	60	51.1	43.7	2.5	6.0
			80/67	50.2	40.2	59.5	3.1	16.4				70	50.3	42.0	2.8	5.3
			85/71	51.4	42.3	61.6	3.1	16.7				80	49.4	40.2	3.1	4.7
	9.0	2.3	75/63	48.6	39.6	57.0	2.8	17.3		9.0	3.0	60	54.9	47.4	2.6	6.2
			80/67	52.0	40.9	60.6	2.8	18.3				70	53.9	45.4	2.8	5.6
			85/71	54.8	43.5	63.9	2.9	19.1				80	52.8	43.1	3.1	5.0
	12.0	3.9	75/63	49.3	40.0	57.5	2.7	18.2		12.0	4.9	60	57.2	49.7	2.6	6.4
			80/67	53.0	41.2	61.3	2.7	19.4				70	56.0	47.6	2.9	5.7
			85/71	56.5	43.0	64.9	2.8	20.5				80	54.9	44.9	3.1	5.1
90	6.0	1.1	75/63	44.6	38.5	54.6	3.3	13.5	70	6.0	1.4	60	57.3	49.4	2.6	6.4
			80/67	47.0	40.2	57.4	3.4	14.0				70	56.2	47.6	2.9	5.7
			85/71	46.8	40.7	58.6	3.4	14.0				80	55.0	45.7	3.2	5.1
	9.0	2.2	75/63	46.5	38.7	55.7	3.1	15.0		9.0	2.8	60	61.6	53.8	2.7	6.7
			80/67	50.4	38.7	59.6	3.1	16.1				70	60.5	51.7	3.0	6.0
			85/71	48.5	41.3	59.5	3.1	15.6				80	59.2	49.2	3.2	5.4
	12.0	3.7	75/63	47.2	39.0	56.1	3.0	15.8		12.0	4.6	60	64.4	56.4	2.8	6.9
			80/67	50.5	40.8	59.6	3.0	16.8				70	63.1	54.1	3.0	6.2
			85/71	54.0	42.0	63.3	3.0	17.8				80	61.4	51.9	3.3	5.5
100	6.0	1.0	75/63	42.8	37.1	53.7	3.7	11.7	80	6.0	1.4	60	63.1	55.2	2.7	6.8
			80/67	43.0	38.8	55.1	3.7	11.7				70	62.3	53.4	3.0	6.1
			85/71	45.0	40.1	57.7	3.7	12.1				80	61.1	51.3	3.3	5.5
	9.0	2.2	75/63	43.7	38.5	54.1	3.4	12.8		9.0	2.7	60	68.7	60.5	2.8	7.1
			80/67	46.9	40.0	57.4	3.5	13.6				70	67.4	58.3	3.1	6.4
			85/71	46.8	40.7	58.6	3.4	13.6				80	65.9	55.7	3.4	5.8
	12.0	3.6	75/63	45.0	38.0	54.8	3.3	13.6		12.0	4.4	60	72.0	63.6	2.9	7.3
			80/67	47.9	40.1	58.0	3.3	14.4				70	70.4	61.1	3.1	6.6
			85/71	50.0	41.8	60.7	3.3	15.0				80	68.7	58.3	3.4	5.9
110	6.0	1.0	75/63	39.4	36.7	52.0	4.1	9.7	90	6.0	1.3	60	69.7	61.4	2.8	7.2
			80/67	41.6	38.3	54.7	4.1	10.1				70	68.7	59.5	3.1	6.5
			85/71	48.6	32.3	60.0	4.2	11.5				80	67.4	57.3	3.4	5.8
	9.0	2.1	75/63	42.3	36.2	53.5	3.8	11.1		9.0	2.6	60	76.2	67.4	3.0	7.5
			80/67	42.9	38.7	55.2	3.8	11.2				70	74.3	64.9	3.2	6.8
			85/71	44.6	40.0	57.6	3.8	11.6				80	72.9	62.4	3.5	6.1
	12.0	3.4	75/63	42.8	37.1	53.7	3.7	11.6		12.0	4.2	60	79.9	70.9	3.1	7.7
			80/67	44.0	39.1	55.8	3.7	12.0				70	77.8	68.2	3.3	6.9
			85/71	45.5	40.3	58.0	3.7	12.3				80	76.1	65.4	3.6	6.2

Extended Range - Anti-freeze required

AHRI/ISO13256-1 certified performance is rated at entering air conditions of 80.6°F DB and 66.2°F WB in cooling and 68°F DB in heating.

Tabulated unit performance does not include fan or pump power corrections required for AHRI/ISO standard performance ratings.

Unit performance may be interpolated. Extrapolation is not allowed.

For conditions other than rating conditions provided, consult the BST selection software.

Ratings below 40°F are with a methanol solution.

DISCLAIMER: The performance reported herein is based on testing by FHP. Variations in the installation and operational environment may alter performance. Bosch disclaims all warranties, express and implied, that the performance will be as reported, including the warranty of merchantability and fitness for purpose. In addition, continuous research and development may result in a change to an appliances design and specifications at the time of order, which Bosch may change without notice. Before purchase, confirm the design specifications of the appliance.

Capacity Data 048 (1300 CFM) - Part Load

Cooling									Heating							
Entering Fluid Temp (°F)	Water flow (GPM)	Pressure Drop (PSI)	Entering Air Temp DB/WB (°F)	Total Capacity (MBTUH)	Sensible Capacity (MBTUH)	Heat of Rejection (MBTUH)	Power Input (kW)	EER	Entering Fluid Temp (°F)	Water flow (GPM)	Pressure Drop (PSI)	Entering Air Temp (°F)	Total Capacity (MBTUH)	Heat of Absorption (MBTUH)	Power Input (kW)	COP
50	6.0	1.4	75/63	40.2	32.0	44.0	1.3	31.4	30	6.0	1.8	60	23.9	18.9	1.7	4.2
			80/67	43.2	32.9	47.0	1.3	33.8				70	22.9	17.8	1.9	3.6
			85/71	46.0	34.2	49.8	1.3	36.2				80	22.4	16.4	2.1	3.2
	9.0	2.8	75/63	41.7	32.5	45.1	1.2	35.8		9.0	3.5	60	25.3	20.7	1.7	4.5
			80/67	44.6	33.6	48.1	1.1	39.0				70	23.3	17.3	1.9	3.7
			85/71	47.9	34.5	51.3	1.1	42.4				80	23.6	17.6	2.1	3.3
	12.0	4.5	75/63	42.4	32.7	45.7	1.1	38.5		12.0	5.5	60	26.3	21.7	1.7	4.6
			80/67	45.6	33.8	48.8	1.1	42.4				70	25.3	20.1	1.9	4.0
			85/71	48.8	34.9	52.0	1.1	46.2				80	24.3	18.2	2.1	3.4
60	6.0	1.3	75/63	38.2	31.0	42.4	1.5	25.9	40	6.0	1.7	60	27.5	22.7	1.7	4.9
			80/67	40.8	32.1	45.1	1.5	27.7				70	26.5	21.1	1.9	4.2
			85/71	41.4	33.3	46.4	1.5	28.4				80	25.6	19.6	2.1	3.6
	9.0	2.6	75/63	39.5	31.5	43.4	1.4	29.1		9.0	3.3	60	29.0	24.1	1.7	5.1
			80/67	42.4	32.6	46.3	1.3	31.5				70	28.0	22.8	1.9	4.4
			85/71	45.5	33.5	49.4	1.3	34.1				80	26.7	20.4	2.1	3.8
	12.0	4.3	75/63	40.1	31.9	43.8	1.3	30.9		12.0	5.3	60	29.5	24.5	1.7	5.2
			80/67	43.2	32.9	46.9	1.3	33.8				70	29.1	23.9	1.9	4.6
			85/71	46.1	34.2	49.9	1.3	36.7				80	28.4	22.6	2.1	4.0
70	6.0	1.2	75/63	36.0	30.1	40.7	1.7	21.5	50	6.0	1.6	60	31.6	27.0	1.6	5.6
			80/67	36.3	31.2	41.8	1.7	21.8				70	30.5	25.1	1.9	4.8
			85/71	38.3	32.3	44.0	1.7	23.1				80	29.5	23.4	2.1	4.2
	9.0	2.5	75/63	37.3	30.6	41.7	1.6	23.9		9.0	3.1	60	33.3	28.7	1.6	5.9
			80/67	40.0	31.7	44.4	1.6	25.8				70	32.0	26.7	1.9	5.1
			85/71	40.0	32.8	45.3	1.5	26.0				80	30.8	24.7	2.1	4.3
	12.0	4.1	75/63	37.9	30.9	42.2	1.5	25.3		12.0	5.0	60	34.3	29.4	1.6	6.1
			80/67	40.6	32.2	45.0	1.5	27.4				70	32.9	27.5	1.9	5.2
			85/71	41.4	33.3	46.4	1.5	28.3				80	31.5	25.3	2.1	4.4
80	6.0	1.2	75/63	33.1	29.5	38.6	1.9	17.5	60	6.0	1.5	60	36.0	31.4	1.6	6.4
			80/67	37.9	26.5	42.7	1.9	20.0				70	34.8	29.5	1.9	5.5
			85/71	36.2	31.6	42.5	1.9	19.2				80	33.7	27.6	2.1	4.7
	9.0	2.4	75/63	34.0	29.9	39.3	1.8	19.2		9.0	2.9	60	38.1	33.6	1.6	6.8
			80/67	35.9	31.0	41.5	1.8	20.3				70	36.7	31.4	1.9	5.8
			85/71	37.5	32.0	43.5	1.8	21.4				80	35.5	29.3	2.1	5.0
	12.0	3.9	75/63	35.6	29.9	40.4	1.7	20.8		12.0	4.8	60	39.4	34.6	1.6	7.0
			80/67	36.0	31.1	41.6	1.7	21.1				70	37.8	32.5	1.9	6.0
			85/71	38.3	32.3	44.1	1.7	22.7				80	36.5	30.3	2.1	5.1
90	6.0	1.1	75/63	31.6	28.1	37.5	2.1	14.8	70	6.0	1.4	60	40.7	36.0	1.7	7.2
			80/67	35.3	26.2	40.8	2.1	16.5				70	39.3	34.0	1.9	6.2
			85/71	38.5	25.3	43.8	2.1	18.0				80	38.1	32.0	2.1	5.3
	9.0	2.3	75/63	33.4	27.4	38.8	2.0	16.6		9.0	2.8	60	43.1	38.7	1.7	7.6
			80/67	36.7	26.5	41.8	2.0	18.3				70	41.6	36.4	1.9	6.5
			85/71	35.2	31.2	41.8	2.0	17.6				80	40.3	34.1	2.1	5.6
	12.0	3.8	75/63	32.6	29.3	38.3	1.9	16.7		12.0	4.5	60	44.5	40.2	1.7	7.8
			80/67	34.5	30.5	40.4	1.9	17.8				70	42.9	37.8	1.9	6.7
			85/71	35.9	31.5	42.4	1.9	18.6				80	41.5	35.3	2.1	5.7
100	6.0	1.1	75/63	29.3	27.4	36.1	2.4	12.2	80	6.0	1.3	60	45.5	40.9	1.7	8.0
			80/67	31.5	28.6	38.3	2.4	13.1				70	44.1	38.7	1.9	6.8
			85/71	32.7	30.4	40.2	2.4	13.6				80	42.8	36.7	2.1	5.9
	9.0	2.2	75/63	30.3	27.8	36.7	2.3	13.3		9.0	2.6	60	48.4	43.9	1.7	8.3
			80/67	32.6	28.9	39.1	2.3	14.3				70	46.8	41.5	1.9	7.1
			85/71	33.6	30.7	40.7	2.3	14.8				80	45.4	39.2	2.2	6.2
	12.0	3.6	75/63	30.9	27.9	37.0	2.2	14.0		12.0	4.3	60	50.3	45.8	1.7	8.6
			80/67	34.5	26.7	40.3	2.2	15.7				70	48.4	43.2	1.9	7.3
			85/71	34.3	30.9	41.2	2.2	15.6				80	46.8	40.8	2.2	6.3
110	6.0	1.0	75/63	27.2	26.5	34.8	2.7	10.1	90	6.0	1.3	60	50.4	45.7	1.7	8.6
			80/67	29.5	27.7	37.1	2.7	10.9				70	49.1	43.5	1.9	7.4
			85/71	31.7	28.9	39.4	2.7	11.7				80	47.7	41.5	2.2	6.4
	9.0	2.1	75/63	28.1	26.9	35.3	2.6	10.9		9.0	2.5	60	53.8	49.2	1.8	8.9
			80/67	30.3	28.2	37.6	2.6	11.9				70	52.3	46.9	2.0	7.7
			85/71	32.1	30.2	39.8	2.6	12.6				80	50.7	44.4	2.2	6.7
	12.0	3.5	75/63	28.6	27.1	35.6	2.5	11.4		12.0	4.1	60	55.9	51.2	1.8	9.1
			80/67	31.0	28.2	38.0	2.5	12.4				70	54.2	48.8	2.0	7.8
			85/71	33.4	29.6	40.5	2.5	13.5				80	52.4	46.4	2.3	6.8

Extended Range - Anti-freeze required

AHRI/ISO13256-1 certified performance is rated at entering air conditions of 80.6°F DB and 66.2°F WB in cooling and 68°F DB in heating.

Tabulated unit performance does not include fan or pump power corrections required for AHRI/ISO standard performance ratings.

Unit performance may be interpolated. Extrapolation is not allowed.

For conditions other than rating conditions provided, consult the BST selection software.

Ratings below 40°F are with a methanol solution.

DISCLAIMER: The performance reported herein is based on testing by FHP. Variations in the installation and operational environment may alter performance. Bosch disclaims all warranties, express and implied, that the performance will be as reported, including the warranty of merchantability and fitness for purpose. In addition, continuous research and development may result in a change to an appliances design and specifications at the time of order, which Bosch may change without notice. Before purchase, confirm the design specifications of the appliance.

Capacity Data 060 (1950 CFM) - Full Load

Cooling									Heating							
Entering Fluid Temp (°F)	Water flow (GPM)	Pressure Drop (PSI)	Entering Air Temp DB/WB (°F)	Total Capacity (MBTUH)	Sensible Capacity (MBTUH)	Heat of Rejection (MBTUH)	Power Input (kW)	EER	Entering Fluid Temp (°F)	Water flow (GPM)	Pressure Drop (PSI)	Entering Air Temp (°F)	Total Capacity (MBTUH)	Heat of Absorption (MBTUH)	Power Input (kW)	COP
50	7.5	1.2	75/63	65.7	49.7	74.6	2.9	22.8	30	7.5	1.5	60	45.3	35.9	3.0	4.4
			80/67	69.9	51.1	79.0	2.9	23.9				70	44.8	34.2	3.3	4.0
			85/71	74.3	52.7	83.7	3.0	25.2				80	43.5	32.0	3.6	3.5
	11.0	2.5	75/63	67.5	50.4	75.9	2.7	25.2		11.0	2.9	60	47.7	38.2	3.0	4.6
			80/67	71.9	51.9	80.5	2.7	26.5				70	46.8	36.5	3.3	4.1
			85/71	76.7	53.2	85.3	2.7	28.1				80	46.5	35.1	3.7	3.7
	15.0	4.0	75/63	68.4	50.8	76.4	2.6	26.5		15.0	4.8	60	49.0	39.7	3.1	4.7
			80/67	72.9	52.4	81.1	2.6	28.0				70	48.9	37.5	3.4	4.3
			85/71	77.8	53.3	86.1	2.6	29.7				80	47.8	36.8	3.7	3.8
60	7.5	1.2	75/63	63.4	48.6	73.2	3.2	20.1	40	7.5	1.4	60	51.3	41.9	3.1	4.8
			80/67	67.5	49.9	77.5	3.2	21.0				70	50.6	40.2	3.4	4.4
			85/71	72.0	51.2	82.1	3.2	22.2				80	50.1	36.9	3.7	3.9
	11.0	2.3	75/63	65.0	49.3	74.2	3.0	22.0		11.0	2.8	60	54.2	44.8	3.2	5.0
			80/67	69.3	50.8	78.7	3.0	23.2				70	53.3	42.6	3.5	4.5
			85/71	74.2	51.9	83.6	3.0	24.6				80	52.7	41.2	3.8	4.1
	15.0	3.8	75/63	65.9	49.6	74.8	2.9	23.0		15.0	4.5	60	56.0	46.5	3.2	5.1
			80/67	70.2	51.4	79.3	2.9	24.3				70	54.9	44.2	3.5	4.6
			85/71	75.2	52.4	84.3	2.9	25.9				80	54.1	41.9	3.8	4.2
70	7.5	1.1	75/63	60.9	47.5	71.5	3.5	17.6	50	7.5	1.3	60	58.0	48.4	3.2	5.3
			80/67	64.8	49.0	75.7	3.5	18.5				70	57.0	46.3	3.5	4.7
			85/71	68.9	50.9	80.0	3.5	19.5				80	55.8	44.3	3.9	4.2
	11.0	2.2	75/63	62.4	48.3	72.5	3.3	19.2		11.0	2.6	60	61.7	52.0	3.3	5.5
			80/67	66.5	50.0	76.8	3.3	20.3				70	60.5	49.7	3.6	4.9
			85/71	71.4	50.9	81.7	3.3	21.6				80	59.1	46.5	3.9	4.4
	15.0	3.6	75/63	63.4	48.7	73.2	3.2	20.1		15.0	4.2	60	63.8	54.2	3.3	5.6
			80/67	67.7	50.2	77.6	3.2	21.3				70	62.4	51.9	3.6	5.0
			85/71	72.4	51.2	82.4	3.2	22.7				80	60.8	49.1	4.0	4.5
80	7.5	1.0	75/63	58.3	46.3	70.0	3.8	15.4	60	7.5	1.2	60	65.3	55.3	3.4	5.7
			80/67	62.1	48.1	74.0	3.8	16.2				70	63.9	53.2	3.7	5.1
			85/71	66.2	49.6	78.3	3.9	17.0				80	63.7	50.9	4.0	4.7
	11.0	2.1	75/63	60.1	46.9	71.0	3.6	16.8		11.0	2.5	60	69.8	59.7	3.4	6.0
			80/67	64.1	48.5	75.3	3.6	17.7				70	68.0	57.4	3.7	5.3
			85/71	68.4	50.1	79.8	3.6	18.8				80	67.2	54.5	4.1	4.8
	15.0	3.4	75/63	60.8	47.4	71.5	3.5	17.5		15.0	4.0	60	72.5	62.1	3.5	6.1
			80/67	65.0	48.8	75.8	3.5	18.6				70	70.7	58.9	3.8	5.5
			85/71	69.5	50.3	80.4	3.5	19.8				80	69.2	55.8	4.1	4.9
90	7.5	1.0	75/63	55.8	45.7	68.5	4.2	13.4	70	7.5	1.2	60	72.8	62.7	3.5	6.1
			80/67	59.5	47.1	72.4	4.2	14.2				70	71.3	60.5	3.8	5.5
			85/71	63.7	48.1	76.9	4.3	14.9				80	70.1	58.0	4.1	5.0
	11.0	2.0	75/63	57.2	46.3	69.3	3.9	14.6		11.0	2.3	60	78.3	67.8	3.6	6.4
			80/67	61.3	47.6	73.6	4.0	15.5				70	76.3	65.2	3.9	5.8
			85/71	65.4	49.2	77.9	4.0	16.4				80	75.1	62.1	4.2	5.2
	15.0	3.3	75/63	58.2	46.3	69.9	3.8	15.3		15.0	3.8	60	81.4	70.8	3.6	6.6
			80/67	62.2	48.0	74.1	3.8	16.2				70	79.4	67.2	3.9	5.9
			85/71	66.7	49.2	78.7	3.9	17.3				80	77.8	64.7	4.3	5.3
100	7.5	0.9	75/63	53.3	44.5	67.3	4.6	11.7	80	7.5	1.1	60	80.9	70.1	3.6	6.6
			80/67	56.9	46.1	71.1	4.6	12.3				70	79.0	67.9	3.9	5.9
			85/71	60.8	47.4	75.3	4.7	13.0				80	78.0	65.0	4.3	5.3
	11.0	1.9	75/63	54.9	44.8	68.1	4.3	12.7		11.0	2.2	60	86.9	76.3	3.7	6.9
			80/67	58.7	46.4	72.1	4.4	13.5				70	85.1	72.7	4.0	6.2
			85/71	62.5	48.3	76.1	4.4	14.3				80	83.1	70.6	4.4	5.5
	15.0	3.1	75/63	55.6	45.5	68.4	4.2	13.3		15.0	3.6	60	90.5	79.8	3.8	7.0
			80/67	59.4	47.1	72.3	4.2	14.1				70	88.4	76.2	4.1	6.3
			85/71	63.4	48.8	76.7	4.2	14.9				80	86.1	72.8	4.4	5.7
110	7.5	0.9	75/63	50.5	43.6	65.8	5.0	10.0	90	7.5	1.0	60	89.0	78.0	3.7	7.0
			80/67	54.1	45.1	69.8	5.1	10.6				70	87.0	75.5	4.1	6.3
			85/71	57.9	46.5	73.9	5.2	11.2				80	85.5	72.2	4.4	5.7
	11.0	1.8	75/63	52.1	44.0	66.6	4.8	10.9		11.0	2.1	60	95.8	84.3	3.8	7.3
			80/67	55.8	45.6	70.7	4.8	11.6				70	93.7	81.8	4.2	6.6
			85/71	59.6	47.2	74.6	4.8	12.3				80	91.6	78.2	4.6	5.9
	15.0	2.9	75/63	52.9	44.2	67.1	4.6	11.4		15.0	3.4	60	100.0	88.1	3.9	7.5
			80/67	56.7	45.6	71.1	4.7	12.2				70	97.6	85.5	4.3	6.7
			85/71	60.7	47.4	75.3	4.7	12.9				80	95.2	81.4	4.6	6.0

Extended Range - Anti-freeze required

AHRI/ISO13256-1 certified performance is rated at entering air conditions of 80.6°F DB and 66.2°F WB in cooling and 68°F DB in heating.

Tabulated unit performance does not include fan or pump power corrections required for AHRI/ISO standard performance ratings.

Unit performance may be interpolated. Extrapolation is not allowed.

For conditions other than rating conditions provided, consult the BST selection software.

Ratings below 40°F are with a methanol solution.

DISCLAIMER: The performance reported herein is based on testing by FHP. Variations in the installation and operational environment may alter performance. Bosch disclaims all warranties, express and implied, that the performance will be as reported, including the warranty of merchantability and fitness for purpose. In addition, continuous research and development may result in a change to an appliances design and specifications at the time of order, which Bosch may change without notice. Before purchase, confirm the design specifications of the appliance.

Capacity Data 060 (1575 CFM) Part Load

Cooling									Heating							
Entering Fluid Temp (°F)	Water flow (GPM)	Pressure Drop (PSI)	Entering Air Temp DB/WB (°F)	Total Capacity (MBTUH)	Sensible Capacity (MBTUH)	Heat of Rejection (MBTUH)	Power Input (kW)	EER	Entering Fluid Temp (°F)	Water flow (GPM)	Pressure Drop (PSI)	Entering Air Temp (°F)	Total Capacity (MBTUH)	Heat of Absorption (MBTUH)	Power Input (kW)	COP
50	7.5	1.2	75/63	51.3	39.4	56.4	1.7	30.2	30	7.5	1.5	60	32.7	26.6	2.0	4.7
			80/67	54.6	40.6	59.7	1.7	32.3				70	31.0	24.4	2.3	4.0
			85/71	58.0	41.5	63.2	1.7	34.5				80	29.6	21.9	2.5	3.5
	11.0	2.5	75/63	52.7	40.0	57.6	1.6	33.2		11.0	2.9	60	34.0	28.0	2.0	4.9
			80/67	56.3	41.0	61.1	1.6	35.8				70	32.3	25.5	2.3	4.2
			85/71	59.9	42.0	64.7	1.6	38.5				80	30.5	23.2	2.5	3.6
	15.0	4.0	75/63	53.6	40.4	58.2	1.5	34.9		15.0	4.7	60	34.7	28.7	2.0	5.0
			80/67	57.0	41.5	61.7	1.5	37.6				70	33.0	26.1	2.3	4.3
			85/71	60.9	42.6	65.5	1.5	40.7				80	31.0	23.6	2.5	3.6
60	7.5	1.2	75/63	48.7	38.3	54.4	1.9	25.6	40	7.5	1.4	60	37.3	31.4	2.1	5.3
			80/67	51.9	39.4	57.7	1.9	27.3				70	35.8	28.9	2.3	4.6
			85/71	55.1	40.6	60.9	1.9	29.1				80	34.3	26.6	2.5	4.0
	11.0	2.3	75/63	50.1	38.9	55.5	1.8	28.0		11.0	2.7	60	38.9	33.1	2.1	5.5
			80/67	53.5	40.1	58.9	1.8	30.1				70	37.2	30.6	2.3	4.8
			85/71	57.0	41.2	62.4	1.8	32.4				80	35.6	28.1	2.5	4.1
	15.0	3.8	75/63	50.9	39.2	56.1	1.7	29.4		15.0	4.4	60	39.8	34.1	2.1	5.6
			80/67	54.3	40.4	59.5	1.7	31.7				70	38.2	31.4	2.3	4.9
			85/71	57.9	41.5	63.1	1.7	34.1				80	36.5	28.8	2.5	4.2
70	7.5	1.1	75/63	46.0	37.2	52.4	2.1	21.6	50	7.5	1.3	60	42.5	36.5	2.1	6.0
			80/67	49.1	38.4	55.5	2.1	23.1				70	40.9	34.1	2.3	5.2
			85/71	52.3	39.5	58.8	2.1	24.6				80	39.4	31.7	2.6	4.5
	11.0	2.2	75/63	47.4	37.7	53.4	2.0	23.6		11.0	2.6	60	44.5	38.6	2.1	6.2
			80/67	50.6	39.0	56.6	2.0	25.3				70	42.8	36.1	2.3	5.4
			85/71	53.9	40.2	60.0	2.0	27.1				80	41.1	33.3	2.6	4.7
	15.0	3.6	75/63	48.0	38.0	53.9	2.0	24.6		15.0	4.2	60	45.7	39.9	2.1	6.4
			80/67	51.4	39.3	57.2	1.9	26.5				70	43.9	37.3	2.3	5.5
			85/71	54.8	40.5	60.7	1.9	28.6				80	42.2	34.1	2.6	4.8
80	7.5	1.0	75/63	43.3	36.0	50.3	2.4	18.1	60	7.5	1.2	60	48.1	42.0	2.1	6.7
			80/67	46.2	37.4	53.4	2.4	19.4				70	46.4	39.5	2.4	5.8
			85/71	49.3	38.6	56.5	2.4	20.7				80	44.8	36.9	2.6	5.0
	11.0	2.1	75/63	44.6	36.6	51.4	2.3	19.8		11.0	2.4	60	50.5	44.6	2.1	6.9
			80/67	47.8	38.0	54.5	2.3	21.2				70	48.7	42.0	2.4	6.0
			85/71	51.0	39.1	57.8	2.2	22.8				80	46.8	39.2	2.6	5.2
	15.0	3.4	75/63	45.3	37.0	51.8	2.2	20.6		15.0	4.0	60	51.9	46.1	2.1	7.1
			80/67	48.5	38.2	55.1	2.2	22.2				70	49.9	43.4	2.4	6.2
			85/71	51.9	39.3	58.4	2.2	23.9				80	48.0	40.5	2.6	5.3
90	7.5	1.0	75/63	40.5	34.9	48.4	2.7	15.2	70	7.5	1.2	60	54.1	48.3	2.1	7.4
			80/67	43.4	36.3	51.4	2.7	16.2				70	52.0	45.2	2.4	6.4
			85/71	46.4	37.4	54.4	2.7	17.3				80	50.2	42.5	2.6	5.6
	11.0	2.0	75/63	41.8	35.4	49.3	2.5	16.4		11.0	2.3	60	56.6	50.8	2.2	7.7
			80/67	44.8	36.7	52.3	2.5	17.7				70	54.7	48.2	2.4	6.7
			85/71	47.9	38.1	55.5	2.5	19.0				80	52.7	45.3	2.7	5.8
	15.0	3.3	75/63	42.4	35.8	49.7	2.5	17.1		15.0	3.8	60	58.3	52.7	2.2	7.9
			80/67	45.5	37.1	52.8	2.5	18.5				70	56.4	49.9	2.4	6.9
			85/71	48.7	38.4	56.0	2.4	19.9				80	54.2	46.9	2.7	6.0
100	7.5	0.9	75/63	37.7	33.8	46.5	3.0	12.6	80	7.5	1.1	60	60.5	54.7	2.2	8.2
			80/67	40.5	35.1	49.4	3.0	13.5				70	58.7	51.9	2.4	7.2
			85/71	43.4	36.4	52.3	3.0	14.4				80	56.8	49.1	2.7	6.2
	11.0	1.9	75/63	38.8	34.3	47.2	2.9	13.6		11.0	2.2	60	63.9	58.2	2.2	8.6
			80/67	41.8	35.6	50.2	2.9	14.7				70	61.9	55.4	2.4	7.5
			85/71	44.9	36.8	53.4	2.8	15.8				80	59.7	52.3	2.7	6.5
	15.0	3.1	75/63	39.4	34.6	47.6	2.8	14.1		15.0	3.6	60	65.9	60.4	2.2	8.9
			80/67	42.3	36.2	50.6	2.8	15.2				70	63.8	57.4	2.4	7.7
			85/71	45.7	37.0	53.9	2.8	16.5				80	61.5	54.2	2.7	6.7
110	7.5	0.9	75/63	34.6	33.0	44.5	3.4	10.3	90	7.5	1.0	60	66.2	60.5	2.2	8.9
			80/67	37.5	34.1	47.4	3.4	11.2				70	64.3	57.5	2.4	7.8
			85/71	40.0	36.2	50.2	3.4	11.9				80	62.2	54.6	2.7	6.8
	11.0	1.8	75/63	35.8	33.3	45.2	3.2	11.1		11.0	2.1	60	70.1	64.5	2.2	9.5
			80/67	38.8	34.4	48.3	3.2	12.1				70	67.7	61.1	2.4	8.2
			85/71	41.7	35.8	51.2	3.2	13.0				80	65.5	58.2	2.7	7.2
	15.0	2.9	75/63	36.5	33.3	45.7	3.1	11.6		15.0	3.4	60	72.3	66.8	2.2	9.8
			80/67	39.4	34.7	48.7	3.1	12.6				70	69.7	63.5	2.4	8.5
			85/71	42.3	36.2	51.6	3.1	13.6				80	67.5	60.3	2.7	7.4

Extended Range - Anti-freeze required

AHRI/ISO13256-1 certified performance is rated at entering air conditions of 80.6°F DB and 66.2°F WB in cooling and 68°F DB in heating.

Tabulated unit performance does not include fan or pump power corrections required for AHRI/ISO standard performance ratings.

Unit performance may be interpolated. Extrapolation is not allowed.

For conditions other than rating conditions provided, consult the BST selection software.

Ratings below 40°F are with a methanol solution.

DISCLAIMER: The performance reported herein is based on testing by FHP. Variations in the installation and operational environment may alter performance. Bosch disclaims all warranties, express and implied, that the performance will be as reported, including the warranty of merchantability and fitness for purpose. In addition, continuous research and development may result in a change to an appliances design and specifications at the time of order, which Bosch may change without notice. Before purchase, confirm the design specifications of the appliance.

Capacity Data 070 (2100 CFM) Full Load

Cooling									Heating							
Entering Fluid Temp (°F)	Water flow (GPM)	Pressure Drop (PSI)	Entering Air Temp DB/WB (°F)	Total Capacity (MBTUH)	Sensible Capacity (MBTUH)	Heat of Rejection (MBTUH)	Power Input (kW)	EER	Entering Fluid Temp (°F)	Water flow (GPM)	Pressure Drop (PSI)	Entering Air Temp (°F)	Total Capacity (MBTUH)	Heat of Absorption (MBTUH)	Power Input (kW)	COP
50	9.0	1.6	75/63	73.8	54.6	84.6	3.5	21.3	30	9.0	1.9	60	52.8	40.9	3.5	4.4
			80/67	78.7	56.3	89.8	3.5	22.4				70	51.9	41.0	3.8	4.0
			85/71	83.9	57.7	95.2	3.6	23.5				80	51.5	38.7	4.2	3.6
	13.0	3.2	75/63	75.5	55.7	85.8	3.3	23.2		13.0	3.8	60	55.4	44.1	3.5	4.6
			80/67	80.9	57.2	91.3	3.3	24.5				70	55.0	42.9	3.9	4.1
			85/71	86.4	58.4	97.0	3.3	25.8				80	52.0	39.1	4.2	3.6
	17.5	5.2	75/63	76.6	56.0	86.5	3.2	24.3		17.5	6.2	60	57.8	46.0	3.6	4.7
			80/67	82.0	57.3	92.1	3.2	25.6				70	56.9	45.3	3.9	4.2
			85/71	87.6	58.7	97.9	3.2	27.1				80	56.2	42.9	4.3	3.8
60	9.0	1.5	75/63	71.2	53.6	83.0	3.8	18.9	40	9.0	1.8	60	59.9	49.6	3.6	4.8
			80/67	76.1	55.0	88.1	3.8	19.9				70	58.4	46.4	4.0	4.3
			85/71	81.0	56.6	93.3	3.9	20.9				80	56.1	42.7	4.3	3.8
	13.0	3.0	75/63	73.0	54.2	84.2	3.6	20.5		13.0	3.6	60	62.8	51.7	3.7	5.0
			80/67	78.1	55.8	89.4	3.6	21.7				70	61.0	48.5	4.0	4.5
			85/71	83.3	57.4	94.8	3.6	22.9				80	60.5	47.4	4.4	4.0
	17.5	5.0	75/63	73.9	54.6	84.7	3.5	21.4		17.5	5.8	60	64.2	53.2	3.7	5.1
			80/67	79.0	56.5	90.0	3.5	22.7				70	62.5	51.1	4.1	4.5
			85/71	84.4	57.9	95.5	3.5	24.0				80	61.8	48.4	4.4	4.1
70	9.0	1.4	75/63	68.5	52.4	81.3	4.1	16.6	50	9.0	1.7	60	67.2	56.8	3.8	5.2
			80/67	73.1	54.0	86.2	4.2	17.5				70	65.7	53.3	4.1	4.7
			85/71	78.0	55.2	91.3	4.2	18.5				80	64.0	50.6	4.5	4.2
	13.0	2.9	75/63	70.2	53.2	82.3	3.9	18.1		13.0	3.4	60	71.7	58.4	3.8	5.5
			80/67	75.4	54.5	87.6	3.9	19.2				70	70.1	57.7	4.2	4.9
			85/71	80.3	56.4	92.8	4.0	20.3				80	69.3	55.7	4.6	4.5
	17.5	4.7	75/63	71.3	53.7	83.0	3.8	18.9		17.5	5.5	60	73.8	62.6	3.9	5.6
			80/67	76.3	55.1	88.3	3.8	20.1				70	72.5	60.1	4.2	5.0
			85/71	81.5	56.8	93.6	3.8	21.3				80	70.8	56.7	4.6	4.5
80	9.0	1.3	75/63	65.6	51.2	79.6	4.5	14.6	60	9.0	1.6	60	75.2	62.4	3.9	5.6
			80/67	70.3	52.7	84.5	4.6	15.4				70	74.2	61.1	4.3	5.1
			85/71	75.1	54.1	89.5	4.6	16.3				80	72.8	59.0	4.6	4.6
	13.0	2.7	75/63	67.5	52.0	80.7	4.3	15.9		13.0	3.2	60	80.7	69.2	4.0	5.9
			80/67	72.2	53.6	85.6	4.3	16.8				70	79.0	65.6	4.3	5.3
			85/71	77.1	55.3	90.8	4.3	17.9				80	77.8	63.3	4.7	4.8
	17.5	4.5	75/63	68.4	52.3	81.3	4.1	16.5		17.5	5.2	60	83.7	71.8	4.1	6.0
			80/67	73.2	54.0	86.2	4.2	17.6				70	82.1	68.7	4.4	5.5
			85/71	78.3	55.3	91.5	4.2	18.7				80	80.3	65.4	4.8	4.9
90	9.0	1.3	75/63	62.9	50.1	78.2	4.9	12.7	70	9.0	1.5	60	84.2	72.7	4.1	6.1
			80/67	67.1	51.7	82.7	5.0	13.4				70	82.8	69.3	4.4	5.5
			85/71	71.6	53.3	87.5	5.0	14.2				80	81.6	66.7	4.8	5.0
	13.0	2.6	75/63	64.6	50.5	79.1	4.7	13.8		13.0	3.0	60	90.4	78.7	4.2	6.3
			80/67	69.1	52.4	83.8	4.7	14.7				70	88.7	75.0	4.5	5.7
			85/71	73.8	53.9	88.7	4.7	15.6				80	87.0	69.9	4.9	5.2
	17.5	4.3	75/63	65.4	51.1	79.5	4.5	14.4		17.5	4.9	60	93.9	81.0	4.2	6.5
			80/67	70.0	53.1	84.3	4.6	15.4				70	92.0	78.0	4.6	5.9
			85/71	74.9	54.7	89.3	4.6	16.3				80	90.3	72.9	5.0	5.3
100	9.0	1.2	75/63	60.2	48.7	76.9	5.4	11.1	80	9.0	1.4	60	93.4	80.6	4.2	6.5
			80/67	64.1	50.5	81.2	5.5	11.7				70	91.6	78.0	4.6	5.8
			85/71	68.4	51.8	85.7	5.5	12.3				80	91.8	75.9	5.0	5.4
	13.0	2.4	75/63	61.6	49.6	77.5	5.1	12.0		13.0	2.9	60	100.4	87.9	4.4	6.7
			80/67	66.2	50.7	82.3	5.2	12.8				70	98.3	84.5	4.7	6.1
			85/71	70.5	52.9	86.9	5.2	13.5				80	98.1	81.9	5.2	5.6
	17.5	4.1	75/63	62.7	49.5	78.1	5.0	12.6		17.5	4.7	60	104.6	91.9	4.5	6.9
			80/67	67.1	51.3	82.7	5.0	13.3				70	102.2	87.8	4.8	6.2
			85/71	71.8	53.0	87.6	5.1	14.2				80	99.8	84.7	5.2	5.6
110	9.0	1.1	75/63	57.1	47.7	75.6	6.0	9.6	90	9.0	1.4	60	102.8	89.7	4.4	6.8
			80/67	61.1	49.1	79.8	6.0	10.1				70	101.0	86.6	4.8	6.2
			85/71	65.0	50.8	84.0	6.1	10.7				80	101.3	86.4	5.2	5.7
	13.0	2.3	75/63	58.6	48.4	76.1	5.7	10.4		13.0	2.7	60	110.8	97.4	4.6	7.1
			80/67	62.9	49.9	80.7	5.7	11.0				70	108.3	93.4	4.9	6.4
			85/71	67.2	51.4	85.2	5.7	11.7				80	108.3	90.2	5.4	5.9
	17.5	3.9	75/63	59.6	48.7	76.7	5.5	10.8		17.5	4.5	60	115.4	102.0	4.7	7.2
			80/67	63.9	50.1	81.1	5.5	11.5				70	112.9	98.6	5.0	6.6
			85/71	68.3	51.8	85.7	5.6	12.3				80	109.5	94.9	5.4	5.9

Extended Range - Anti-freeze required

AHRI/ISO13256-1 certified performance is rated at entering air conditions of 80.6°F DB and 66.2°F WB in cooling and 68°F DB in heating.

Tabulated unit performance does not include fan or pump power corrections required for AHRI/ISO standard performance ratings.

Unit performance may be interpolated. Extrapolation is not allowed.

For conditions other than rating conditions provided, consult the BST selection software.

Ratings below 40°F are with a methanol solution.

DISCLAIMER: The performance reported herein is based on testing by FHP. Variations in the installation and operational environment may alter performance. Bosch disclaims all warranties, express and implied, that the performance will be as reported, including the warranty of merchantability and fitness for purpose. In addition, continuous research and development may result in a change to an appliances design and specifications at the time of order, which Bosch may change without notice. Before purchase, confirm the design specifications of the appliance.

Capacity Data 070 (1775 CFM) Part Load

Cooling									Heating							
Entering Fluid Temp (°F)	Water flow (GPM)	Pressure Drop (PSI)	Entering Air Temp DB/WB (°F)	Total Capacity (MBTUH)	Sensible Capacity (MBTUH)	Heat of Rejection (MBTUH)	Power Input (kW)	EER	Entering Fluid Temp (°F)	Water flow (GPM)	Pressure Drop (PSI)	Entering Air Temp (°F)	Total Capacity (MBTUH)	Heat of Absorption (MBTUH)	Power Input (kW)	COP
50	9.0	1.6	75/63	57.9	44.3	64.6	2.2	26.2	30	9.0	1.9	60	38.1	30.6	2.6	4.3
			80/67	61.6	45.7	68.4	2.2	27.9				70	37.1	28.6	2.9	3.8
			85/71	65.7	46.9	72.6	2.2	29.7				80	36.2	26.6	3.2	3.3
	13.0	3.2	75/63	59.1	45.0	65.5	2.1	28.4		13.0	3.8	60	39.8	31.9	2.6	4.5
			80/67	63.1	46.4	69.6	2.1	30.5				70	38.5	30.1	2.9	3.9
			85/71	67.5	47.5	73.9	2.1	32.7				80	37.4	27.8	3.2	3.4
	17.5	5.2	75/63	59.8	45.3	66.0	2.0	29.6		17.5	6.1	60	40.5	33.0	2.6	4.6
			80/67	64.1	46.5	70.3	2.0	32.0				70	39.4	30.5	2.9	4.0
			85/71	68.5	47.7	74.7	2.0	34.5				80	38.1	28.6	3.2	3.5
60	9.0	1.5	75/63	55.3	43.6	62.8	2.5	22.5	40	9.0	1.8	60	43.7	36.2	2.6	4.9
			80/67	59.1	44.7	66.7	2.5	23.9				70	42.7	34.1	2.9	4.3
			85/71	62.9	46.0	70.6	2.5	25.4				80	41.5	32.0	3.2	3.8
	13.0	3.0	75/63	56.7	43.9	63.8	2.3	24.4		13.0	3.5	60	45.9	38.0	2.6	5.1
			80/67	60.5	45.3	67.7	2.3	26.1				70	44.7	35.8	2.9	4.5
			85/71	64.7	46.5	71.9	2.3	27.9				80	43.3	33.3	3.3	3.9
	17.5	5.0	75/63	57.3	44.3	64.3	2.3	25.5		17.5	5.8	60	47.1	39.0	2.6	5.2
			80/67	61.2	45.5	68.2	2.2	27.3				70	45.7	36.6	2.9	4.6
			85/71	65.5	46.9	72.4	2.2	29.3				80	44.3	34.1	3.3	4.0
70	9.0	1.4	75/63	53.0	42.2	61.3	2.8	19.3	50	9.0	1.7	60	50.0	42.2	2.7	5.5
			80/67	56.4	43.7	64.9	2.8	20.4				70	49.1	40.1	3.0	4.8
			85/71	60.1	45.1	68.7	2.8	21.6				80	47.6	37.6	3.3	4.2
	13.0	2.9	75/63	54.2	42.9	62.1	2.6	20.8		13.0	3.3	60	52.5	44.8	2.7	5.7
			80/67	57.9	44.1	65.8	2.6	22.2				70	51.4	42.4	3.0	5.0
			85/71	61.6	45.9	69.6	2.6	23.7				80	49.7	39.7	3.3	4.4
	17.5	4.7	75/63	54.8	43.1	62.5	2.5	21.7		17.5	5.4	60	53.8	46.3	2.7	5.8
			80/67	58.7	44.3	66.4	2.5	23.3				70	52.4	43.7	3.0	5.1
			85/71	62.6	45.9	70.3	2.5	24.9				80	51.0	40.8	3.3	4.5
80	9.0	1.3	75/63	50.3	41.3	59.6	3.1	16.3	60	9.0	1.6	60	56.5	48.7	2.7	6.1
			80/67	53.9	42.4	63.3	3.1	17.4				70	55.3	46.3	3.0	5.3
			85/71	57.4	43.8	66.9	3.1	18.4				80	53.9	43.9	3.4	4.7
	13.0	2.7	75/63	51.6	41.9	60.5	2.9	17.7		13.0	3.2	60	59.5	51.8	2.8	6.3
			80/67	55.2	43.2	64.1	2.9	18.9				70	58.1	49.3	3.1	5.6
			85/71	58.9	44.6	67.9	2.9	20.1				80	56.6	46.5	3.4	4.9
	17.5	4.5	75/63	52.3	42.0	60.9	2.8	18.5		17.5	5.2	60	61.2	53.7	2.8	6.5
			80/67	55.9	43.5	64.5	2.8	19.7				70	59.7	51.0	3.1	5.7
			85/71	59.7	44.7	68.4	2.8	21.1				80	58.2	48.0	3.4	5.0
90	9.0	1.3	75/63	47.8	40.3	58.2	3.5	13.8	70	9.0	1.5	60	63.4	55.6	2.8	6.7
			80/67	51.1	41.7	61.6	3.5	14.7				70	62.1	53.2	3.1	5.9
			85/71	54.6	43.1	65.2	3.5	15.7				80	60.6	50.5	3.4	5.2
	13.0	2.6	75/63	49.0	40.7	58.8	3.3	14.9		13.0	3.0	60	67.1	59.4	2.8	7.0
			80/67	52.4	42.0	62.4	3.3	16.0				70	65.4	56.4	3.1	6.2
			85/71	56.0	43.4	66.0	3.3	17.0				80	63.8	53.8	3.5	5.4
	17.5	4.3	75/63	49.6	40.9	59.2	3.2	15.5		17.5	4.9	60	69.2	61.6	2.8	7.2
			80/67	53.0	42.5	62.7	3.2	16.6				70	67.2	58.6	3.1	6.3
			85/71	56.9	43.5	66.6	3.2	17.8				80	65.7	55.7	3.5	5.5
100	9.0	1.2	75/63	45.1	39.2	56.7	3.9	11.6	80	9.0	1.4	60	70.7	62.9	2.8	7.3
			80/67	48.4	40.7	60.1	3.9	12.5				70	69.1	60.1	3.1	6.4
			85/71	51.8	42.1	63.6	3.9	13.3				80	67.7	57.5	3.5	5.7
	13.0	2.5	75/63	46.2	39.7	57.3	3.7	12.5		13.0	2.8	60	75.1	67.3	2.9	7.7
			80/67	49.6	41.2	60.7	3.7	13.5				70	73.1	64.2	3.2	6.7
			85/71	53.2	42.6	64.4	3.7	14.5				80	71.4	61.3	3.5	5.9
	17.5	4.1	75/63	46.8	39.9	57.6	3.6	13.0		17.5	4.6	60	77.5	69.8	2.9	7.9
			80/67	50.3	41.4	61.2	3.6	14.0				70	75.4	66.7	3.2	6.9
			85/71	53.9	42.9	64.8	3.6	15.1				80	73.6	63.6	3.6	6.1
110	9.0	1.1	75/63	42.6	38.1	55.5	4.3	9.8	90	9.0	1.3	60	77.5	69.6	2.9	7.9
			80/67	45.7	39.7	58.7	4.3	10.6				70	75.6	66.7	3.2	6.9
			85/71	49.0	41.3	62.2	4.3	11.3				80	74.1	64.0	3.6	6.1
	13.0	2.3	75/63	43.5	38.6	55.9	4.1	10.5		13.0	2.7	60	82.4	74.5	2.9	8.2
			80/67	46.9	40.2	59.3	4.1	11.4				70	80.2	71.3	3.3	7.2
			85/71	50.4	41.5	62.9	4.1	12.3				80	78.4	68.3	3.6	6.4
	17.5	3.9	75/63	44.2	38.7	56.3	4.0	10.9		17.5	4.4	60	85.2	77.4	3.0	8.4
			80/67	47.5	40.4	59.7	4.0	11.8				70	82.8	74.0	3.3	7.4
			85/71	51.0	41.8	63.2	4.0	12.7				80	80.7	70.1	3.6	6.5

Extended Range - Anti-freeze required

AHRI/ISO13256-1 certified performance is rated at entering air conditions of 80.6°F DB and 66.2°F WB in cooling and 68°F DB in heating.

Tabulated unit performance does not include fan or pump power corrections required for AHRI/ISO standard performance ratings.

Unit performance may be interpolated. Extrapolation is not allowed.

For conditions other than rating conditions provided, consult the BST selection software.

Ratings below 40°F are with a methanol solution.

DISCLAIMER: The performance reported herein is based on testing by FHP. Variations in the installation and operational environment may alter performance. Bosch disclaims all warranties, express and implied, that the performance will be as reported, including the warranty of merchantability and fitness for purpose. In addition, continuous research and development may result in a change to an appliances design and specifications at the time of order, which Bosch may change without notice. Before purchase, confirm the design specifications of the appliance.

024 - Temperature Pressure Operating Data

Enter Fluid Temp (°F)	Water Flow (GPM)	Cooling				Heating			
		Suction Pressure (PSIG)	Discharge Pressure (PSIG)	Water Temp Rise (°F)	Air Temp Drop (°F)	Suction Pressure (PSIG)	Discharge Pressure (PSIG)	Water Temp Drop (°F)	Air Temp Rise (°F)
30	3.0	Operation Not Recommended				60-70	241-261	8-9	15-19
	6.0					67-77	246-266	4-5	16-20
40	3.0	114-131	180-198	20-23	18-22	72-82	251-271	10-11	17-21
	6.0	113-130	153-171	9-12	19-23	80-90	257-277	5-6	19-23
50	3.0	116-133	209-227	19-22	18-22	85-95	262-282	11-12	20-24
	6.0	114-131	180-198	9-12	18-22	95-105	270-290	6-7	21-25
60	3.0	117-134	240-258	19-22	18-22	99-109	274-294	13-14	22-26
	6.0	116-133	210-228	9-12	18-22	112-122	285-305	7-8	24-28
70	3.0	119-136	274-292	19-22	18-22	115-125	287-307	15-16	25-29
	6.0	117-134	244-262	9-12	18-22	131-141	301-321	8-9	28-32
80	3.0	120-137	312-330	19-22	17-21	133-143	302-322	17-18	28-32
	6.0	119-136	281-299	9-12	18-22	152-162	319-339	9-10	31-35
90	3.0	122-139	354-372	18-21	17-21	152-162	318-338	19-20	31-35
	6.0	121-138	322-340	9-12	17-21	176-186	339-359	11-12	35-39
100	3.0	124-141	400-418	18-21	17-21	Operation Not Recommended			
	6.0	122-139	368-386	9-12	17-21				

036 - Temperature Pressure Operating Data

Enter Fluid Temp (°F)	Water Flow (GPM)	Cooling				Heating			
		Suction Pressure (PSIG)	Discharge Pressure (PSIG)	Water Temp Rise (°F)	Air Temp Drop (°F)	Suction Pressure (PSIG)	Discharge Pressure (PSIG)	Water Temp Drop (°F)	Air Temp Rise (°F)
30	4.5	Operation Not Recommended				58-68	259-279	9-10	18-22
	9.0					65-75	266-286	5-6	19-23
40	4.5	109-125	182-206	20-23	20-24	69-79	271-291	11-12	21-25
	9.0	108-124	157-181	10-13	20-24	78-88	279-299	6-7	22-26
50	4.5	111-127	210-234	20-23	19-23	82-92	284-304	12-13	23-27
	9.0	109-125	184-208	10-13	20-24	93-103	295-315	7-8	25-29
60	4.5	112-128	242-266	20-23	19-23	96-106	299-319	14-15	26-30
	9.0	111-127	215-239	9-12	19-23	110-120	313-333	8-9	29-33
70	4.5	114-130	277-301	19-22	19-23	112-122	316-336	16-17	29-33
	9.0	113-129	249-273	9-12	19-23	129-139	334-354	9-10	33-37
80	4.5	115-131	316-340	19-22	18-22	129-139	334-354	18-19	33-37
	9.0	114-130	288-312	9-12	19-23	150-160	356-376	10-11	37-41
90	4.5	117-133	358-382	19-22	18-22	148-158	355-375	21-22	36-40
	9.0	116-132	330-354	9-12	18-22	174-184	382-402	11-12	41-45
100	4.5	119-135	404-428	18-21	18-22	Operation Not Recommended			
	9.0	118-134	377-401	9-12	18-22				

Bosch Thermotechnology Corp. reserves the right to make changes without notice due to continuing engineering and technological advances | BTC 771608301 C | 09.2026

048 - Temperature Pressure Operating Data

Enter Fluid Temp (°F)	Water Flow (GPM)	Cooling				Heating			
		Suction Pressure (PSIG)	Discharge Pressure (PSIG)	Water Temp Rise (°F)	Air Temp Drop (°F)	Suction Pressure (PSIG)	Discharge Pressure (PSIG)	Water Temp Drop (°F)	Air Temp Rise (°F)
30	6.0	Operation Not Recommended				50-70	241-261	8-9	17-21
	12.0					57-77	247-267	4-5	18-22
40	6.0	108-124	175-195	20-23	20-24	61-81	251-271	10-11	19-23
	12.0	106-122	156-176	10-13	20-24	69-89	259-279	5-6	21-25
50	6.0	110-126	202-222	20-23	20-24	74-94	263-283	11-12	22-26
	12.0	108-124	179-199	9-12	20-24	84-104	273-293	6-7	24-28
60	6.0	111-127	232-252	19-22	19-23	88-108	277-297	13-14	25-29
	12.0	110-126	209-229	9-12	20-24	100-120	289-309	7-8	27-31
70	6.0	113-129	266-286	19-22	19-23	103-123	292-312	15-16	28-32
	12.0	112-128	242-262	9-12	19-23	119-139	306-326	8-9	31-35
80	6.0	115-131	304-324	19-22	19-23	121-141	308-328	17-18	31-35
	12.0	114-130	279-299	9-12	19-23	140-160	326-346	9-10	35-39
90	6.0	116-132	346-366	18-21	18-22	139-159	326-346	19-20	35-39
	12.0	115-131	321-341	9-12	18-22	163-183	348-368	11-12	39-43
100	6.0	118-134	391-411	18-21	18-22	Operation Not Recommended			
	12.0	117-133	366-386	9-12	18-22				

060 - Temperature Pressure Operating Data

Enter Fluid Temp (°F)	Water Flow (GPM)	Cooling				Heating			
		Suction Pressure (PSIG)	Discharge Pressure (PSIG)	Water Temp Rise (°F)	Air Temp Drop (°F)	Suction Pressure (PSIG)	Discharge Pressure (PSIG)	Water Temp Drop (°F)	Air Temp Rise (°F)
30	7.5	Operation Not Recommended				53-69	225-282	8-10	19-23
	15.0					60-76	231-289	5-6	20-25
40	7.5	104-129	170-209	19-25	21-25	64-82	234-296	10-11	22-26
	15.0	103-127	149-185	9-12	21-25	72-91	242-305	5-6	24-29
50	7.5	105-131	195-241	18-24	20-24	75-96	245-311	12-13	25-30
	15.0	104-129	172-215	9-12	20-25	86-108	255-323	6-7	26-32
60	7.5	106-133	223-276	18-24	19-24	89-112	257-328	13-15	27-33
	15.0	105-130	199-249	9-13	20-24	101-126	269-342	7-8	30-36
70	7.5	107-134	253-314	18-24	20-24	103-130	270-346	15-17	31-37
	15.0	106-132	229-286	9-13	20-24	119-147	286-364	9-10	34-41
80	7.5	108-136	288-356	18-24	19-23	119-148	286-366	17-20	34-41
	15.0	108-134	264-327	9-12	19-23	138-169	304-387	9-11	38-45
90	7.5	110-138	326-402	17-23	19-23	137-169	301-387	19-22	37-45
	15.0	109-136	302-372	9-12	19-23	160-194	325-412	11-13	42-50
100	7.5	111-140	368-451	17-22	18-22	Operation Not Recommended			
	15.0	111-138	344-421	9-12	18-22				

Bosch Thermotechnology Corp. reserves the right to make changes without notice due to continuing engineering and technological advances | BTC 771608301 C | 09.2026

070 - Temperature Pressure Operating Data									
Enter Fluid Temp (°F)	Water Flow (GPM)	Cooling				Heating			
		Suction Pressure (PSIG)	Discharge Pressure (PSIG)	Water Temp Rise (°F)	Air Temp Drop (°F)	Suction Pressure (PSIG)	Discharge Pressure (PSIG)	Water Temp Drop (°F)	Air Temp Rise (°F)
30	9.0	Operation Not Recommended				53-69	230-287	8-10	21-25
	18.0					60-76	237-295	4-5	22-27
40	9.0	100-126	171-211	18-22	21-26	64-82	241-303	10-11	24-28
	18.0	99-124	150-188	8-13	21-26	71-90	249-312	5-6	25-30
50	9.0	101-128	194-242	18-22	20-25	75-96	253-319	11-12	27-32
	18.0	100-126	173-218	9-12	21-26	85-107	263-331	6-7	29-35
60	9.0	103-130	221-277	17-22	20-24	89-112	266-337	13-15	30-36
	18.0	101-128	199-251	8-13	21-25	100-125	279-352	7-8	33-39
70	9.0	104-132	252-314	17-22	20-25	103-130	281-357	14-16	33-39
	18.0	103-130	229-288	8-12	20-25	118-146	298-376	8-9	36-43
80	9.0	105-133	286-356	17-21	20-24	119-148	299-379	16-19	37-44
	18.0	104-132	263-329	8-11	19-24	138-169	319-402	9-11	41-48
90	9.0	107-136	324-402	17-21	19-23	137-169	317-403	18-21	41-49
	18.0	106-134	301-373	8-11	19-23	160-194	343-430	10-12	45-53
100	9.0	108-138	366-450	16-21	19-23	Operation Not Recommended			
	18.0	108-137	343-422	8-11	19-23				

Bosch Thermotechnology Corp.
Londonderry, NH • Watertown, MA • Ft. Lauderdale, FL

Bosch Thermotechnology Corp. reserves the right to make changes without notice due to continuing engineering and technological advances | BTC 771608301 C | 09.2026

Tel: 1-800-283-3787 | www.bosch-homecomfort.us