RF Model Series
Residential Water Source Heat Pumps

Engineering Submittal Sheet

BOSCH

- 0.5 to 6 ton capacities
- Single and two stage high efficiency and compact cabinet
- New and improved scroll and rotary compressors
- Brand-new unit design
- Low GWP ready (R-454B refrigerant)

Standard Features, Factory Installed Options, and Field Install Accessories

Standard Features

- Available in Horizontal,Vertical, and Counterflow Cabinets
  - Constructed using painted steel
  - Standard hanging bracket kits on HZ units for suspending the unit from field supplied hanger rods
- Single Stage (007-018) and Two Stage (024-070)
  - Scroll and rotary compressors
- ECM constant torque (007-012)ECM constant airflow (015-070) blowers
- Unit Configuration
  - Left hand or right hand return air
  - Top, end, or bottom supply air
  - Copper or cupro-nickel coaxial coil
- 2" MERV 8 filter with 4-sided filter rack
- 1/2" Dual Density Fiber Insulation
  - 1.5 lb./cu.ft. density micromat fiberglass insulation for both thermal insulation and noise reduction
  - Non-combustible, non-hydroscopic and does not support fungal growth
  - Meets NFPA 90A and 90B for fire protection
  - Meets the GREENGUARD indoor air quality standard
- Compressors
  - Floating compressor base pan for quiet operation
  - Rotary type compressors on sizes 007 through 018
  - Scroll type compressors on sizes 024 through 070
- TXV (Thermal Expansion Valve)
  - Improves refrigerant management and efficiencies
- Reliability - Durability – Serviceability
  - Slide out blower (VT units only)
  - Improved air coil serviceability
  - Completely serviceable from front of unit as well as isolated controls allow the unit to be serviced during operation
- DuoGuard™ Evaporator Coil
  - Tin electro-plated copper tubing hair pins with high-tech polymer coated Aluminum fins will protect the evaporator coil from most forms of corrosive elements in the airstream
- Electronic Circuit Board UPM
  - The electronic circuit board provides protection with:
    - Random start of unit
    - Anti-short cycling (5 minute delay)
    - Alarm communicating output
    - Low pressure switch bypass at cold water start up
  - It also monitors and communicates standard safety features/ alerts/ operation/ protection:
    - Low pressure switch
    - High pressure switch
    - Evaporator freeze protection
    - Water coil freeze switch
    - Condensate overflow switch
  - This circuit board can communicate with a Bosch thermostat that alerts the customer of adverse conditions
- 75 VA Transformer
- Warranty
  - 10 year all parts limited warranty
  - 10 year compressor limited warranty
  - For full warranty details: https://www.bosch-homecomfort.com/us/en/residential/service/product-warranty-library/heat-pump-geothermal-warranty-documents/

Bosch Thermotechnology Corp.
Londonderry, NH • Watertown, MA • Ft. Lauderdale, FL

Bosch Thermotechnology Corp. reserves the right to make changes without notice due to continuing engineering and technological advances | BTC 771508301 E | 09.2026

Tel: 1-800-283-3787 | www.bosch-homecomfort.us

Standard Features, Factory Installed Options, and Field Install Accessories

Standard Features Continued

- Field Configurable Horizontal Discharge Air Conversion
  - The horizontal conversion allows end blow to straight through conversion of discharge air, as factory installed straight through configuration for HZ units is not available.
- Water Connections
  - All water connections are heavy duty bronze FPT fittings securely fastened to the unit corner post

Factory Installed Options

- Cupro-Nickel Coil
  - Recommended in conditions anticipating moderate scale formation or in brackish water

Field Install Accessories

- Thermostats
  - Bosch thermostats are fully customized to meet your individual needs. Bosch offers communicating thermostats that can display alert messages without having to go to the unit.
- Externally Mounted Duct Heater Kits
- Swivel Water Connections
  - 3/4" or 1" FPT swivel water connection
- Pump/Valve Relay Kit
  - This relay is used to energize a supply pump or solenoid valve when there is a call for compressor operation. This relay can be used to switch either high or low voltage power.
- SmartStart Assist Kit
  - An option which provides a means of reducing inrush currents at compressor startup. Light flickering is eliminated, and a smooth start is achieved (only available on scroll compressor models).
- Stainless Steel Hose Kits
  - Available in various lengths and diameters depending on the need for your application.
- Flow Center Kits

Bosch Thermotechnology Corp. reserves the right to make changes without notice due to continuing engineering and technological advances | BTC 771508301 E | 09.2026

Field Installed Accessory - Pump/Valve Relay Kit

Part Number	007		009		012		015		018		024		030		036		042		048		060		070	
	VT	HZ	VT	HZ	VT	HZ	VT	HZ	VT	HZ	VT	HZ	VT	HZ	VT	HZ	VT	HZ	VT	HZ	VT	HZ	VT	HZ
8733951906	●	●	●	●	●	●	●	●	●	●	●	●	●	●	●	●	●	●	●	●	●	●	●	●

Field Installed Accessory - Flow Proving Switch (Differential Pressure) Kit

Part Number	007		009		012		015		018		024		030		036		042		048		060		070	
	VT	HZ	VT	HZ	VT	HZ	VT	HZ	VT	HZ	VT	HZ	VT	HZ	VT	HZ	VT	HZ	VT	HZ	VT	HZ	VT	HZ
8733920264	●	●	●	●	●	●	●	●	●	●	●	●	●	●	●	●	●	●	●	●	●	●	●	●

Field Installed Accessory - Swivel Connector Kit (two connectors per package)

Order Number	Type & Size	007		009		012		015		018		024		030		036		042		048		060		070	
		VT	HZ	VT	HZ	VT	HZ	VT	HZ	VT	HZ	VT	HZ	VT	HZ	VT	HZ	VT	HZ	VT	HZ	VT	HZ	VT	HZ
		Where Used																							
8733927179	Male 3/4" NPT	●	●	●	●	●	●	●	●	●	●	●	●	●	●	●	●	●	●						
8733927180	Male 1" NPT																			●	●	●	●	●	●

Field Installed Accessory - SmartStart Assist Kit

Part Number	007		009		012		015		018		024		030		036		042		048		060		070	
	VT	HZ	VT	HZ	VT	HZ	VT	HZ	VT	HZ	VT	HZ	VT	HZ	VT	HZ	VT	HZ	VT	HZ	VT	HZ	VT	HZ
8733957159											●	●	●	●	●	●								
8733957160																	●	●	●	●	●	●	●	●

Bosch Thermotechnology Corp.
Londonderry, NH • Watertown, MA • Ft. Lauderdale, FL

Bosch Thermotechnology Corp. reserves the right to make changes without notice due to continuing engineering and technological advances | BTC 771508301 E | 09.2026

Tel: 1-800-283-3787 | www.bosch-homecomfort.us

Field Installed Accessory - Stainless Steel Hose Kits						
Options	Option 1	Option 2	Option 3**	Option 4**,***	Option 5**, ***	Option 6**, ***
Hose Size (Length, Diameter)	Hoses Only with Swivel	Hose Kit Hoses with Ported Ball Valves, Swivel and One P/T*	Hose Kit with Automatic Flow Valve (AFV)*	Hose kit with AFV, Y-Strainer & Blow Down Valve*	Hose Kit with AFV and Electric Valve*	Hose Kit with AFV, Y-Strainer, BDV and Electric Valve*
	Part #	Part #	Part #	Part #	Part #	Part #
12 Inch						
1/2" L	T111H02121	T111H02122	T111H02123	T111H02124	T111H02125	T111H02126
24 Inch						
3/4" S	T111H03241	T111H03242	T111H03243	T111H03244	T111H03245	T111H03246
1" L	T111H04241	T111H04242	T111H04243	T111H04244	T111H04245	T111H04246
1" S	T111H04241	T111H04242	T111H04247	T111H04248	T111H04249	T111H04240
1 - 1/4" S	T111H05241	T111H05242	T111H05243	T111H05244	T111H05245	T111H05246
1 - 1/2" L	T111H06241	T111H06242	T111H06243	T111H06244	T111H06245	T111H06246
1 - 1/2" S	T111H06241	T111H06242	T111H06247	T111H06248	T111H06249	T111H06240
2" S	T111H08241	T111H08242	T111H08243	T111H08244	T111H08245	T111H08246
36 Inch						
3/4" S	T111H03361	T111H03362	T111H03363	T111H03364	T111H03365	T111H03366
1" L	T111H04361	T111H04362	T111H04363	T111H04364	T111H04365	T111H04366
1" S	T111H04361	T111H04362	T111H04367	T111H04368	T111H04369	T111H04360
1 - 1/4" S	T111H05361	T111H05362	T111H05363	T111H05364	T111H05365	T111H05366
1 - 1/2" L	T111H06361	T111H06362	T111H06363	T111H06364	T111H06365	T111H06366
1 - 1/2" S	T111H06361	T111H06362	T111H06367	T111H06368	T111H06369	T111H06360
2" S	T111H08361	T111H08362	T111H08363	T111H08364	T111H08365	T111H08366

***** All Hose Kis include S/R ported ball valves with swivel and P/T port.
****** 'L' and 'S' only apply to kit options 3 through 6
******* GMP's are required for hose kits in options 3-6

Hose Kit Flow Rates by Size

Please see Technical Service Bulletin: Heat Pump Hose Kits – Water Flow Rates.
This document is located at www.bosch-climate.us under Support Center > Downloads > Downloads for Bosch Products > Service Bulletins.

Bosch Thermotechnology Corp. reserves the right to make changes without notice due to continuing engineering and technological advances | BTC 771508301 E | 09.2026

Model Nomenclature

RF 024 - 1 VT C - L L T A D A - X G G X X X X X X 7 X X X X 4 X X X X S B A

1-2 3-5 6 7 8-9 10 11 12 13 14 15 16 17 18 19 20 21 22 23 24 25 26 27 28 29 30 31 32 33 34 35 36 37 38 39 40

MODEL:
RF

NOMINAL CAPACITY:
007, 009, 012, 015, 018, 024, 030, 036, 042, 048, 060, 070

ELECTRICAL CONFIGURATION:
1 - 208-230/60/1

CABINET CONFIGURATION:
CF - Counterflow
HZ - Horizontal
VT - Vertical

COAX OPTIONS:
C - Copper
N - Cupro-Nickel

WATER CONNECTIONS:
L - Front Left Water

RETURN AIR CONFIGURATION:
L - Left
R - Right

DISCHARGE AIR LOCATION:
B - Bottom
E - End Blow
T - Top

FAN/MOTOR OPTION:
A - Constant Airflow ECM
T - Constant Torque ECM

AIR COIL:
D - DuoGuard

REVISION LEVEL:
A - Current

ELECTRIC HEAT:
X - None

CABINET CONSTRUCTION:
G - Painted Steel / 1/2" Standard 1.5 LB Dual Density Fiberglass

APPLICATION:
G - Extended Range (Geothermal)

CODE STRING LEVEL:
A - Revision

CHANNEL:
B - Bosch

STANDARD/SPECIAL:
S - Standard

AGENCY OPTIONS:
X - R-454B Refrigerant

NOT USED:
X - None

DRIVE SPEED (MC ONLY)
X - N/A

MOTOR HP/QTY (BELT DRIVE ONLY)
X - N/A

AIR FILTRATION:
4 - MERV8 - 2" 4-Sided Filter Rack (Side Access)

DESTINATION SPECIFIC REQUIREMENT:
X - None
A - French & English Documentation

ECONOMIZER:
X - None

WATER FLOW CONTROL OPTIONS:
X - None

CONTROLS:
X - Standard

TRANSFORMER:
7 - 75 VA

REFRIGERATION:
X - None
D - Heat Recovery Package

ELECTRICAL OPTIONS:
X - As default for non used electrical codes
L - Leak Detection Sensor

Bosch Thermotechnology Corp. reserves the right to make changes without notice due to continuing engineering and technological advances | BTC 771508301 E | 09.2026

AHRI Ratings (13256-1) - Copper Water Coil & ECM Motor

Model Number	Configuration	Load	Water Loop Heat Pump				Ground Water Heat Pump				Ground Loop Heat Pump				CFM	GPM
			Cooling 86 deg.F		Heating 68 deg.F		Cooling 59 deg.F		Heating 50 deg.F		FL Cooling 77 deg.F PL Cooling 68 deg.F		FL Heating 32 deg.F PL Heating 41 deg.F			
			Capacity Btu/h	EER Btuh/W-h	Capacity Btu/h	COP	Capacity Btu/h	EER Btuh/W-h	Capacity Btu/h	COP	Capacity Btu/h	EER Btuh/W-h	Capacity Btu/h	COP		
007	HZ / VT	Full	7,000	16.0	8,500	5.5	8,000	24.0	7,000	4.7	7,400	18.5	5,000	3.6	300	2.00
009	HZ / VT	Full	8,900	15.0	10,500	5.5	9,800	23.0	8,400	4.5	9,200	17.5	6,500	3.6	330	2.50
012	HZ / VT	Full	12,000	15.0	14,500	5.0	13,500	23.0	12,000	4.3	12,500	17.5	9,000	3.6	400	3.00
015	HZ / VT	Full	14,900	15.5	17,000	5.2	16,700	24.0	14,000	4.3	15,700	18.0	11,000	3.6	500	3.75
018	HZ / VT	Full	19,000	15.5	21,300	5.0	21,300	24.0	18,000	4.4	20,000	18.0	14,200	3.6	600	4.75
024	HZ / VT	Full	24,000	15.5	28,000	5.0	26,000	23.0	23,000	4.0	25,000	17.0	18,000	3.7	800	6.00
		Part	17,400	17.0	19,400	5.5	19,000	27.0	16,000	4.5	18,600	24.0	14,000	4.1	600	6.00
	CF	Full	23,200	15.0	27,200	4.8	25,200	22.3	22,200	3.9	24,200	16.5	17,400	3.6	800	6.00
		Part	16,800	16.5	18,800	5.3	18,400	26.2	15,400	4.4	18,000	23.3	13,600	4.0	600	6.00
030	HZ / VT	Full	30,000	15.0	34,000	5.0	32,000	22.0	28,000	4.0	31,000	16.5	23,400	3.7	950	7.50
		Part	21,000	16.5	24,000	5.5	23,000	27.0	20,000	4.5	22,000	23.0	17,000	4.1	720	7.50
	CF	Full	29,000	14.6	33,000	4.8	31,000	21.3	27,200	3.9	30,000	16.0	22,600	3.6	950	7.50
		Part	20,400	16.0	23,200	5.3	22,400	26.2	19,400	4.4	21,400	22.3	16,400	4.0	720	7.50
036	HZ / VT	Full	36,000	15.0	42,000	5.0	40,000	21.0	35,400	4.2	38,000	16.5	28,000	3.7	1,200	9.00
		Part	25,000	16.5	30,000	5.5	28,000	27.0	24,000	4.5	27,000	23.0	20,400	4.1	900	9.00
	CF	Full	35,000	14.6	40,800	4.8	38,800	20.4	34,400	4.1	36,800	16.0	27,200	3.6	1,200	9.00
		Part	24,200	16.0	29,200	5.3	27,200	26.2	23,200	4.4	26,200	22.3	19,800	4.0	900	9.00
042	HZ / VT	Full	42,000	15.0	50,000	5.0	45,000	21.0	40,000	4.2	43,000	16.5	32,000	3.7	1,400	10.50
		Part	30,000	16.5	36,000	5.5	33,000	26.0	28,000	4.6	32,000	22.5	24,000	4.1	1,120	10.50
	CF	Full	40,500	14.6	48,500	4.8	43,500	20.4	39,000	4.1	41,500	16.0	31,000	3.6	1,400	10.50
		Part	29,000	16.0	35,000	5.3	32,000	25.2	27,500	4.5	31,000	21.8	23,500	4.0	1,120	10.50
048	HZ / VT	Full	48,000	15.0	58,000	5.0	52,000	21.0	48,000	4.2	49,000	16.5	38,000	3.7	1,600	12.00
		Part	34,000	16.5	40,000	5.5	38,000	27.0	32,000	4.6	36,000	23.0	28,000	4.1	1,200	12.00
	CF	Full	46,500	14.6	56,500	4.8	50,500	20.4	46,500	4.1	47,500	16.0	37,000	3.6	1,600	12.00
		Part	33,000	16.0	39,000	5.3	37,000	26.2	31,000	4.5	35,000	22.3	27,500	4.0	1,200	12.00
060	HZ / VT	Full	60,000	14.5	69,000	5.0	67,000	20.0	60,000	4.2	62,000	16.0	47,000	3.7	2,000	15.00
		Part	42,000	16.0	48,000	5.5	48,000	26.5	40,000	4.6	45,000	22.0	35,000	4.1	1,500	15.00
	CF	Full	58,000	14.1	67,000	4.8	65,000	19.4	58,000	4.1	60,000	15.5	45,500	3.6	2,000	15.00
		Part	40,500	15.5	46,500	5.3	46,500	25.7	38,500	4.5	43,500	21.3	34,000	4.0	1,500	15.00
070	VT	Full	68,000	14.0	80,000	4.9	75,000	20.0	68,000	4.0	71,000	16.0	53,000	3.5	2,100	17.00
		Part	50,000	15.5	57,000	5.2	57,000	25.0	47,000	4.2	56,000	21.5	42,000	3.7	1,650	17.00
	HZ	Full	65,000	13.5	80,000	4.3	71,000	19.5	68,000	4.0	68,000	15.5	53,000	3.5	2,100	17.00
		Part	50,000	15.0	57,000	4.6	54,000	22.7	47,000	4.2	53,000	19.5	42,000	3.7	1,650	17.00
	CF	Full	66,000	13.6	77,000	4.8	72,000	19.4	66,000	4.0	68,000	15.5	52,000	3.5	2,100	17.00
		Part	48,000	15.0	55,000	5.0	55,000	24.3	46,000	4.2	54,000	20.9	41,000	3.7	1,650	17.00

Bosch Thermotechnology Corp. reserves the right to make changes without notice due to continuing engineering and technological advances | BTC 771508301 E | 09.2026

AHRI Ratings (13256-1) - Cupro-Nickel Water Coil & ECM Motor

Model Number	Configuration	Load	Water Loop Heat Pump				Ground Water Heat Pump				Ground Loop Heat Pump				CFM	GPM
			Cooling 86 deg.F		Heating 68 deg.F		Cooling 59 deg.F		Heating 50 deg.F		FL Cooling 77 deg.F PL Cooling 68 deg.F		FL Heating 32 deg.F PL Heating 41 deg.F			
			Capacity Btu/h	EER Btuh/W-h	Capacity Btu/h	COP	Capacity Btu/h	EER Btuh/W-h	Capacity Btu/h	COP	Capacity Btu/h	EER Btuh/W-h	Capacity Btu/h	COP		
007	HZ / VT	Full	7,000	16.0	8,500	5.5	8,000	24.0	7,000	4.7	7,400	18.5	5,000	3.6	300	2.00
009	HZ / VT	Full	8,900	15.0	10,500	5.5	9,800	23.0	8,400	4.5	9,200	17.5	6,500	3.6	330	2.50
012	HZ / VT	Full	12,000	15.0	14,500	5.0	13,500	23.0	11,700	4.3	12,500	17.5	9,000	3.6	400	3.00
015	HZ / VT	Full	14,900	15.5	17,000	5.2	16,700	23.5	14,000	4.3	15,500	17.5	11,000	3.6	500	3.75
018	HZ / VT	Full	19,000	15.5	21,300	5.0	21,000	24.0	17,700	4.4	19,700	18.0	14,200	3.6	600	4.75
024	HZ / VT	Full	24,000	15.5	28,000	5.0	26,000	23.0	23,000	4.0	25,000	17.0	18,000	3.7	800	6.00
		Part	17,400	17.0	19,400	5.5	19,000	27.0	16,000	4.5	18,600	24.0	14,000	4.1	600	6.00
	CF	Full	22,800	14.7	26,800	4.8	24,800	21.9	21,800	3.9	23,800	16.2	17,000	3.5	800	6.00
		Part	16,600	16.2	18,400	5.2	18,000	25.7	15,200	4.3	17,600	22.8	13,400	3.9	600	6.00
030	HZ / VT	Full	30,000	15.0	34,000	5.0	32,000	21.5	28,000	4.0	31,000	16.5	23,400	3.7	950	7.50
		Part	21,000	16.5	24,000	5.5	23,000	27.0	20,000	4.5	22,000	23.0	17,000	4.1	720	7.50
	CF	Full	28,400	14.3	32,400	4.8	30,400	20.4	26,600	3.9	29,400	15.7	22,200	3.5	950	7.50
		Part	20,000	15.7	22,800	5.2	22,000	25.7	19,000	4.3	21,000	21.9	16,000	3.9	720	7.50
036	HZ / VT	Full	36,000	15.0	42,000	5.0	40,000	21.0	35,000	4.2	38,000	16.5	28,000	3.7	1,200	9.00
		Part	25,000	16.5	30,000	5.5	28,000	27.0	24,000	4.5	27,000	22.8	20,400	4.1	900	9.00
	CF	Full	34,400	14.3	40,000	4.8	38,000	20.0	33,400	4.0	36,000	15.7	26,600	3.5	1,200	9.00
		Part	23,800	15.7	28,600	5.2	26,600	25.7	22,800	4.3	25,600	21.7	19,400	3.9	900	9.00
042	HZ / VT	Full	42,000	15.0	50,000	5.0	45,000	21.0	40,000	4.2	43,000	16.5	32,000	3.7	1,400	10.50
		Part	30,000	16.5	36,000	5.5	33,000	26.0	28,000	4.6	32,000	22.5	24,000	4.1	1,120	10.50
	CF	Full	39,500	14.3	47,500	4.8	42,500	20.0	38,000	4.0	40,500	15.7	30,500	3.5	1,400	10.50
		Part	28,500	15.7	34,500	5.2	31,500	24.7	27,000	4.4	30,500	21.4	23,000	3.9	1,120	10.50
048	HZ / VT	Full	48,000	15.0	58,000	5.0	52,000	21.0	48,000	4.2	49,000	16.5	38,000	3.7	1,600	12.00
		Part	34,000	16.5	40,000	5.5	38,000	27.0	32,000	4.6	36,000	23.0	28,000	4.1	1,200	12.00
	CF	Full	45,500	14.3	55,500	4.8	49,500	20.0	45,500	4.0	46,500	15.7	36,000	3.5	1,600	12.00
		Part	32,500	15.7	38,000	5.2	36,000	25.7	30,500	4.4	34,500	21.9	27,000	3.9	1,200	12.00
060	HZ / VT	Full	60,000	14.5	69,000	5.0	66,500	20.0	58,500	4.2	62,000	16.0	46,000	3.7	2,000	15.00
		Part	42,000	15.8	48,000	5.5	48,000	26.5	40,000	4.6	45,000	22.0	35,000	4.1	1,500	15.00
	CF	Full	57,000	13.8	65,500	4.8	63,000	19.0	55,500	4.0	59,000	15.2	43,500	3.5	2,000	15.00
		Part	39,500	15.0	45,500	5.2	45,500	25.2	38,000	4.4	42,500	20.9	33,500	3.9	1,500	15.00
070	VT	Full	68,000	14.0	80,000	4.9	75,000	20.0	68,000	4.0	70,500	16.0	53,000	3.5	2,100	17.00
		Part	50,000	15.5	57,000	5.2	57,000	25.0	47,000	4.2	56,000	21.5	42,000	3.7	1,650	17.00
	HZ	Full	65,000	13.5	80,000	4.3	71,000	19.5	68,000	4.0	67,500	15.5	53,000	3.5	2,100	17.00
		Part	50,000	14.8	57,000	4.6	54,000	22.7	47,000	4.2	53,000	19.5	42,000	3.7	1,650	17.00
	CF	Full	65,000	13.3	75,000	4.7	71,000	19.0	65,000	4.0	67,000	15.2	51,000	3.5	2,100	17.00
		Part	47,000	14.7	54,000	4.9	54,000	23.8	45,000	4.2	53,000	20.4	40,000	3.7	1,650	17.00

Bosch Thermotechnology Corp.
Londonderry, NH • Watertown, MA • Ft. Lauderdale, FL

Bosch Thermotechnology Corp. reserves the right to make changes without notice due to continuing engineering and technological advances | BTC 771508301 E | 09.2026

Tel: 1-800-283-3787 | www.bosch-homecomfort.us

Vertical Unit Configurations

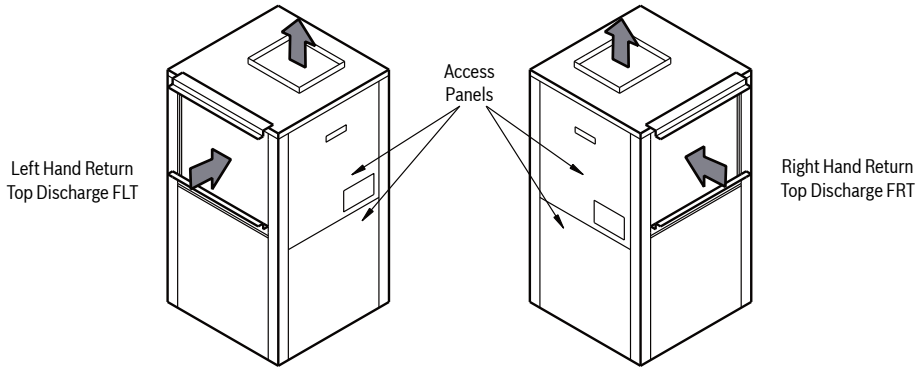

Horizontal Unit Configurations

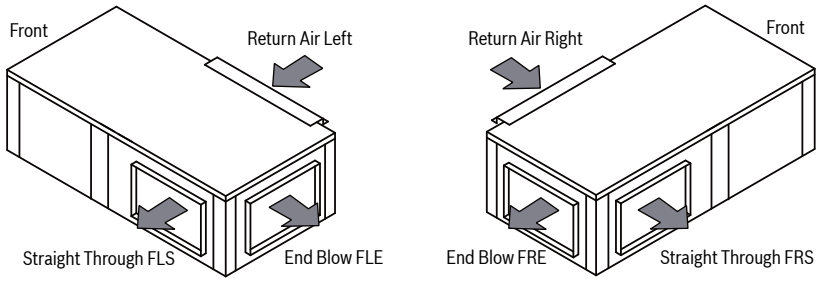

Counterflow Unit Configurations

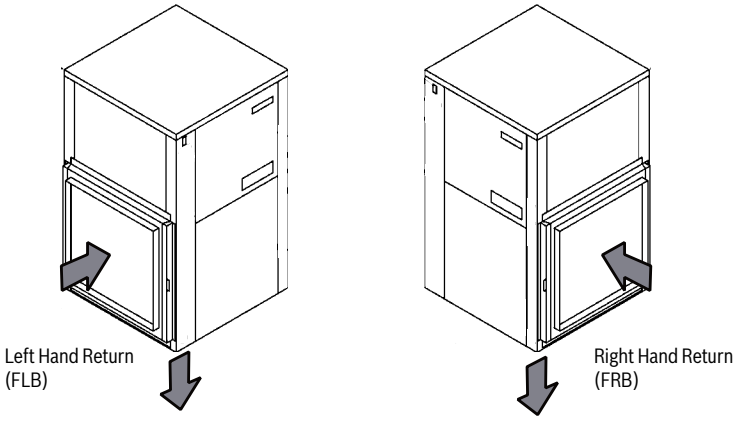

Unit Service clearances:
- Compressor & electrical box access: Minimum 24", 36" recommended.
- Blower access: Minimum 18", 24" recommended.

Please consult product IOM for more information.

Bosch Thermotechnology Corp.
Londonderry, NH • Watertown, MA • Ft. Lauderdale, FL

Bosch Thermotechnology Corp. reserves the right to make changes without notice due to continuing engineering and technological advances | BTC 771508301 E | 09.2026

Tel: 1-800-283-3787 | www.bosch-homecomfort.us

Vertical Unit Dimensions and Connections

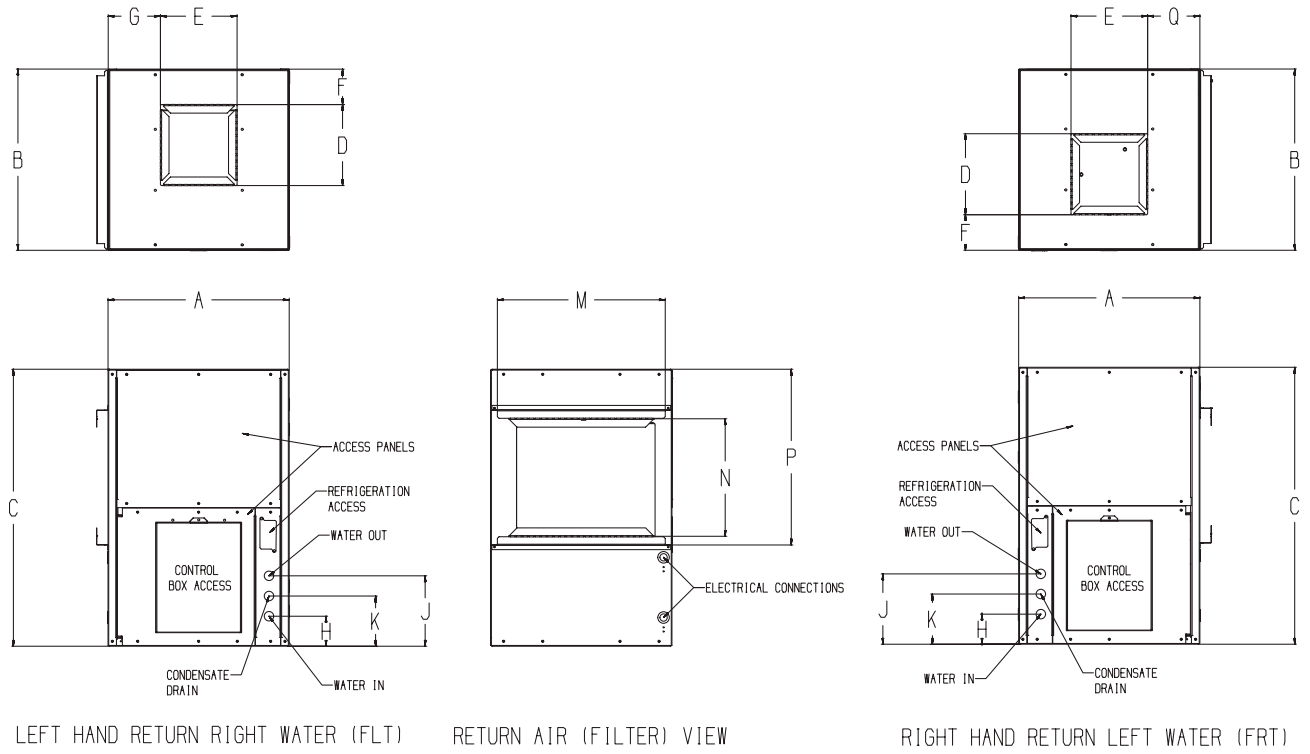

Vertical Unit Dimensions

Model Number	A Width	B Depth	C Height	D Discharge Depth	E Discharge Width	F Cabinet Edge to Discharge	G Left Side to Discharge	H Water Inlet	J Water Outlet	K Condensate Drain	M R/A Duct Width	N R/A Duct Flange Height	P Filter Rack Height	Q Cabinet Edge to Discharge (Right Hand Return)	Condenser Water Connections	Recommended Replacement Nominal Filter Size
007	21.50	21.50	33.00	4.00	6.75	7.25	7.50	3.50	8.50	5.75	17.50	15.00	17.25	7.50	3/4" FPT	17 x 19
009	21.50	21.50	33.00	4.00	6.75	7.25	7.50	3.50	8.50	5.75	17.50	15.00	17.25	7.50	3/4" FPT	17 x 19
012	21.50	21.50	33.00	4.00	6.75	7.25	7.50	3.50	8.50	5.75	17.50	15.00	17.25	7.50	3/4" FPT	17 x 19
015	21.50	21.50	33.00	9.50	9.25	4.25	6.25	3.00	8.50	5.75	17.50	15.00	17.25	6.25	3/4" FPT	17 x 19
018	21.50	21.50	39.00	9.50	9.25	4.25	6.25	3.25	8.50	6.00	18.00	20.00	22.25	6.25	3/4" FPT	18 x 22
024	21.50	21.50	39.00	9.50	9.25	4.25	6.25	3.25	8.50	6.25	18.00	20.00	22.25	6.25	3/4" FPT	18 x 22
030	21.50	21.50	39.00	10.50	9.75	2.25	6.52	3.25	8.50	5.84	16.25	24.75	22.25	6.52	3/4" FPT	19 x 27
036	21.50	26.00	44.00	10.50	9.75	5.75	5.50	3.25	8.50	5.75	24.00	28.00	30.00	5.58	3/4" FPT	24 x 30
042	24.00	26.00	44.00	10.50	10.50	5.00	6.75	3.25	8.50	5.75	23.75	28.00	31.25	6.75	3/4" FPT	24 x 30
048	24.00	26.00	44.00	10.50	10.50	5.00	6.75	3.25	8.50	5.75	23.75	28.00	31.25	6.75	1" FPT	24 x 30
060	24.00	33.00	51.00	12.50	11.75	9.00	6.25	3.00	8.25	5.75	27.25	34.00	37.25	6.25	1" FPT	18x30 (Qty 2)
070	24.00	33.00	51.00	12.50	11.75	9.00	6.25	3.00	8.25	5.50	27.25	34.00	37.25	6.25	1" FPT	18x30 (Qty 2)

NOTES: All dimensions within +/– 0.125". All condensate drain connections are 3/4" FPT. Specifications subject to change without notice. Overall unit dimensions do not include filter rack or duct flanges.

Bosch Thermotechnology Corp. reserves the right to make changes without notice due to continuing engineering and technological advances | BTC 771508301 E | 09.2026

Horizontal Unit Dimensions and Connections

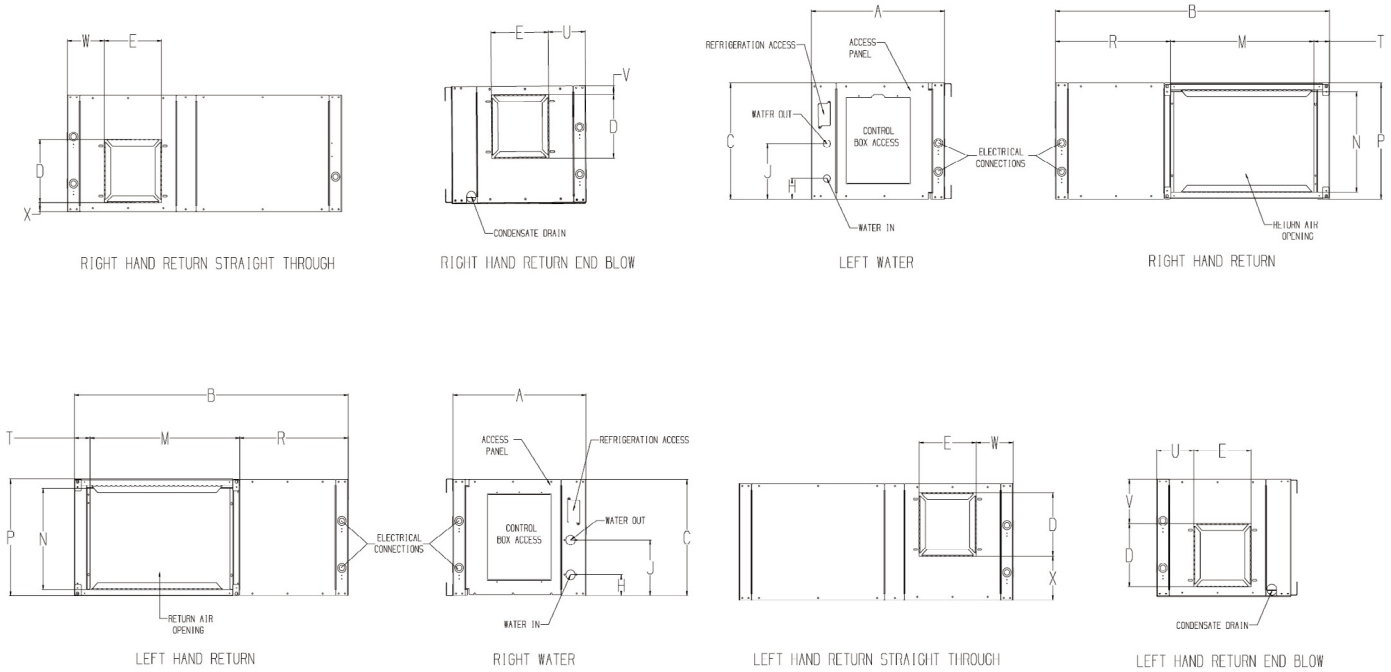

Horizontal Unit Dimensions

Model Number	A Width	B Depth	C Height	D Discharge Height	E Discharge Width	H Water Inlet	J Water Outlet	M R/A Duct Width	N R/A Duct Flange Height	P Filter Rack Height	R Cabinet Front to Filter Rack	T Cabinet End to Filter Rack	U Side to Discharge (Left Return End Blow)	U Side to Discharge (Right Return End Blow)	V Top to Discharge (Left Return End Blow)	V Top to Discharge (Right Return End Blow)	W End to Discharge (Left Straight Through)	W End to Discharge (Right Straight Through)	X Bottom to Discharge (Left Straight Through)	X Bottom to Discharge (Right Straight Through)	Condenser Water Connections	Recommen- ded Replacement Nominal Filter Size
007	21.50	44.00	17.00	4.00	6.75	3.25	8.50	24.00	14.00	16.00	19.25	0.75	7.25	7.25	9.25	3.50	5.75	7.25	3.50	3.50	3/4"FPT	16 x 24
009	21.50	44.00	17.00	4.00	6.75	3.25	8.50	24.00	14.00	16.00	19.25	0.75	7.25	7.25	9.25	3.50	5.75	7.25	3.50	3.50	3/4"FPT	16 x 24
012	21.50	44.00	17.00	4.00	6.75	3.25	8.50	24.00	14.00	16.00	19.25	0.75	7.25	7.25	9.25	3.50	5.75	7.25	3.50	3.50	3/4"FPT	16 x 24
015	21.50	44.00	17.00	9.50	9.25	3.25	8.50	24.00	14.00	16.00	19.25	0.75	6.00	6.00	5.75	1.25	6.00	6.00	5.75	1.25	3/4"FPT	16 x 24
018	21.50	44.00	18.00	9.50	9.25	3.25	8.50	24.25	15.25	17.25	18.50	1.25	6.00	6.00	6.75	1.25	6.00	6.00	6.75	1.25	3/4"FPT	17 x 25
024	21.50	44.00	18.00	9.50	9.25	3.25	8.50	24.25	15.25	17.25	18.50	1.25	6.00	6.00	6.75	1.25	6.00	6.00	6.75	1.25	3/4"FPT	17 x 25
030	21.50	47.00	19.00	10.50	9.75	3.25	8.50	29.25	16.00	18.00	15.50	2.25	5.50	5.50	6.00	1.75	5.50	5.50	6.00	1.75	3/4"FPT	18 x 30
036	21.50	47.00	19.00	10.50	9.75	3.25	8.50	29.25	16.00	18.00	15.50	2.25	5.50	5.50	6.00	1.75	5.50	5.50	6.00	1.75	3/4"FPT	18 x 30
042	24.00	54.00	21.00	10.50	10.50	3.25	8.50	33.25	18.00	20.00	19.50	1.25	5.25	5.25	8.00	1.50	5.25	5.25	8.00	1.50	3/4"FPT	20 x 34
048	24.00	54.00	21.00	10.50	10.50	3.25	8.50	33.50	18.00	20.00	19.50	1.25	5.25	5.25	8.00	1.50	5.25	5.25	8.00	1.50	1"FPT	20 x 34
060	24.00	62.00	21.00	12.50	11.75	3.00	8.25	43.00	18.00	20.00	16.00	2.25	5.50	5.50	7.00	1.50	5.50	5.50	7.00	1.50	1"FPT	20 x 20 & 20 x 24
070	24.00	65.00	21.00	12.50	11.75	3.00	8.50	47.50	18.00	20.00	16.00	5.25	5.50	5.50	7.00	1.50	5.50	5.50	7.00	1.50	1"FPT	20 x 24 (Qty 2)

NOTES: All dimensions within +/– 0.125". All condensate drain connections are 3/4" FPT. Units can be field converted between end blow and straight through supply air configurations.
Specifications subject to change without notice. Overall unit dimensions do not include filter rack or duct flanges.

Bosch Thermotechnology Corp.
Londonderry, NH • Watertown, MA • Ft. Lauderdale, FL

Bosch Thermotechnology Corp. reserves the right to make changes without notice due to continuing engineering and technological advances | BTC 771508301 E | 09.2026

Tel: 1-800-283-3787 | www.bosch-homecomfort.us

Counterflow Unit Dimensions and Connections

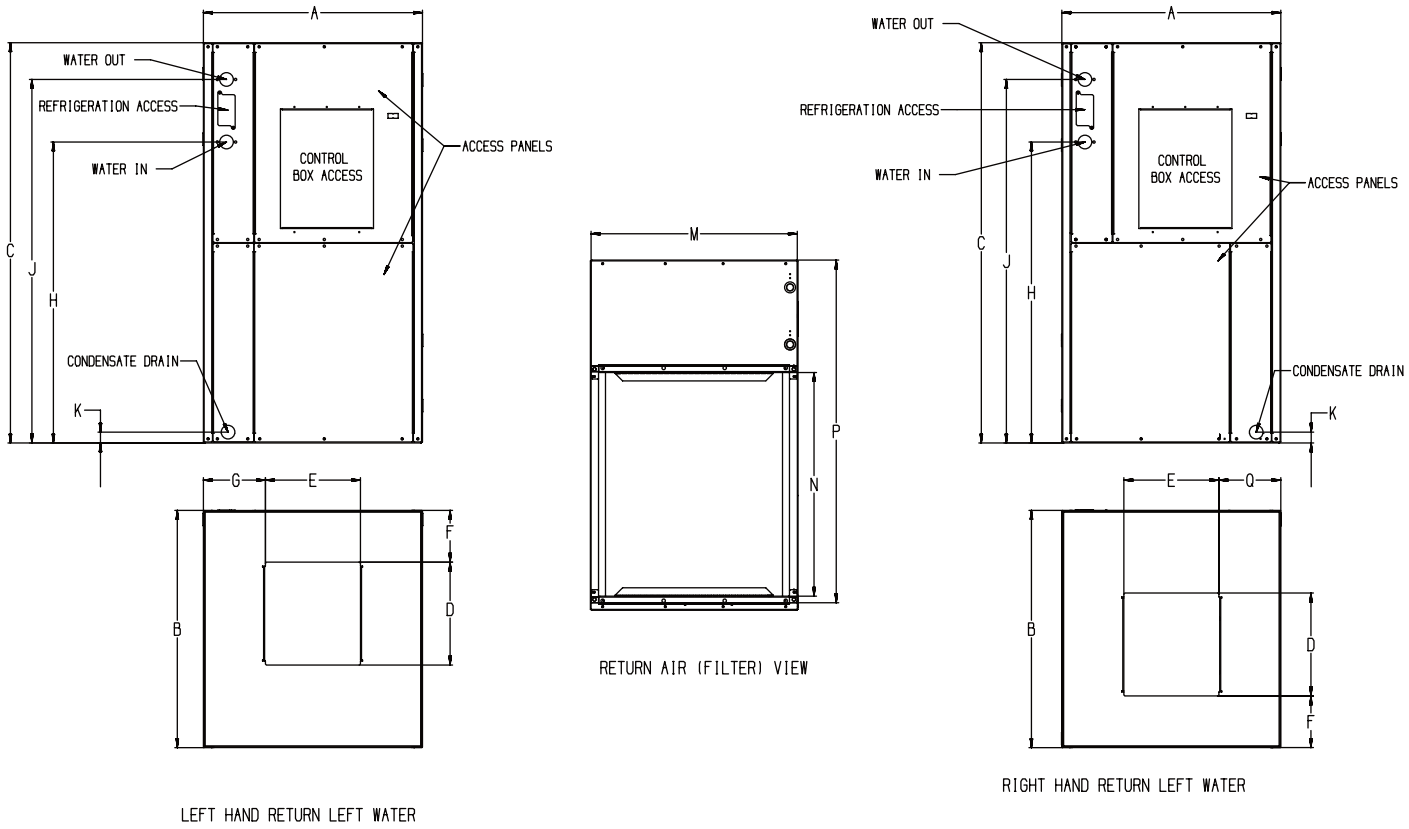

Counterflow Unit Dimensions

Model Number	A Width	B Depth	C Height	D Discharge Depth	E Discharge Width	F Cabinet Edge to Discharge	G Cabinet Edge to Discharge (Left Hand Return)	H Water Inlet	J Water Outlet	K Condensate Drain	M R/A Duct Width	N R/A Duct Flange Height	P Filter Rack Height	Q Cabinet Edge to Discharge (Right Hand Return)	Condenser Water Connections	Recommended Replacement Nominal Filter Size
024	21.50	21.50	39.00	9.50	9.25	3.75	7.25	28.00	35.00	1.25	18.00	20.00	38.00	7.25	3/4" FPT	18 x 22
030	21.50	21.50	39.00	11.25	11.00	3.00	6.00	28.00	35.00	1.25	18.25	25.00	38.00	6.00	3/4" FPT	19 x 27
036	21.50	26.00	44.00	11.25	10.75	5.75	5.50	33.00	40.00	1.25	24.00	28.00	43.25	5.50	3/4" FPT	24 x 30
042	24.00	26.00	44.00	11.25	10.50	5.75	6.75	33.00	40.00	1.25	24.00	28.00	43.25	6.75	3/4" FPT	24 x 30
048	24.00	26.00	44.00	11.25	10.50	5.75	6.75	33.00	40.00	1.25	24.00	28.00	43.25	6.75	1" FPT	24 x 30
060	24.00	33.00	51.00	12.50	11.75	9.75	7.75	41.75	48.50	1.25	27.00	38.25	41.00	7.75	1" FPT	18 x 30 (Qty 2)
070	24.00	33.00	51.00	12.50	11.75	9.75	7.75	41.75	48.50	1.25	27.00	38.25	41.00	7.75	1" FPT	18 x 30 (Qty 2)

NOTES: All dimensions within +/– 0.125". All condensate drain connections are 3/4" FPT. Specifications subject to change without notice. Overall unit dimensions do not include filter rack or duct flanges.

Bosch Thermotechnology Corp. reserves the right to make changes without notice due to continuing engineering and technological advances | BTC 771508301 E | 09.2026

Operating Limits				
Fluid Type	Limit		Cooling	Heating
Air	Minimum Ambient Air		50°F	40°F
	Maximum Ambient Air		100°F	85°F
	Rated Ambient Air		80°F	68°F
	Minimum Air Coil Entering Air DB/WB		65/57°F	45°F
	Maximum Air Coil Entering Air DB/WB		95/85°F	80°F
	Rated Air Coil Entering Air DB/WB		80/67°F	68/59°F
Fluid	Antifreeze Protection Required LWT / EWT		-	< 40/< 50°F
	Minimum Water Coil Entering Fluid		45°F	20°F
	Maximum Water Coil Entering Fluid		110°F	80°F
	Rated Water Coil Entering Fluid	Water Loop Application	86°F	68°F
		Ground Loop Application	77°F	32°F
		Ground Water Application	59°F	50°F
	Maximum Operating Water Pressure	Standard Unit	400psi/2,758kPA	
		With Factory Installed Water Valve Option	300psi/2,068kPA	
	Minimum Operating Water Flow Rate		1.5 GPM per ton	

Bosch Thermotechnology Corp.
Londonderry, NH • Watertown, MA • Ft. Lauderdale, FL

Bosch Thermotechnology Corp. reserves the right to make changes without notice due to continuing engineering and technological advances | BTC 771508301 E | 09.2026

Tel: 1-800-283-3787 | www.bosch-homecomfort.us

Antifreeze Correction							
Antifreeze Type	Antifreeze Volume %	Cooling			Heating		WPD Correction Factor EWT 30 °F
		EWT 90 Deg.F			EWT 30 Deg. F		
		Total Cap.	Sens. Cap	Power	Htg. Cap	Power	
Water	0	1.000	1.000	1.000	1.000	1.000	1.000
Propylene Glycol	5	0.998	0.998	1.004	0.995	0.999	1.085
	10	0.996	0.995	1.008	0.989	0.997	1.165
	15	0.994	0.992	1.012	0.980	0.995	1.257
	25	0.989	0.983	1.023	0.962	0.990	1.491
	35	0.981	0.972	1.040	0.938	0.984	1.812
	40	0.976	0.965	1.050	0.923	0.981	2.012
	45	0.970	0.956	1.062	0.907	0.977	2.240
	50	0.964	0.948	1.076	0.890	0.972	2.502
Methanol	5	0.997	0.997	1.003	0.990	0.997	1.060
	10	0.996	0.996	1.005	0.979	0.993	1.100
	15	0.994	0.994	1.008	0.970	0.990	1.140
Ethanol	5	0.998	0.998	1.002	0.981	0.994	1.160
	10	0.996	0.996	1.004	0.960	0.988	1.230
	15	0.992	0.992	1.006	0.944	0.983	1.280
	25	0.986	0.986	1.009	0.917	0.974	1.400
Ethylene Glycol	5	0.999	0.999	1.002	0.997	0.999	1.035
	10	0.998	0.996	1.005	0.993	0.998	1.086
	15	0.996	0.994	1.009	0.986	0.996	1.145
	25	0.992	0.988	1.018	0.974	0.993	1.278
	30	0.989	0.984	1.023	0.967	0.992	1.354
	35	0.986	0.979	1.029	0.960	0.990	1.436
	40	0.983	0.974	1.036	0.953	0.988	1.528
	45	0.979	0.969	1.044	0.944	0.986	1.629
	50	0.975	0.962	1.053	0.934	0.983	1.743

Bosch Thermotechnology Corp. reserves the right to make changes without notice due to continuing engineering and technological advances | BTC 771508301 E | 09.2026

Waterside Pressure Drop			
Model Number	Water Flow Rate (GPM)	Water Side Pressure Drop without Internal Valve (PSI)	Water Side Pressure Drop with Internal Valve (PSI)
007	0.8	0.4	0.6
	1.1	0.7	1.0
	1.5	1.1	1.5
	2.0	1.8	2.3
009	1.1	1.1	1.3
	1.7	2.1	2.4
	2.3	3.4	3.8
	3.0	5.6	6.2
012	1.5	1.2	1.4
	2.3	2.3	2.7
	3.0	3.8	4.3
	4.0	6.1	6.8
015	1.9	1.3	1.6
	2.8	2.6	3.1
	3.8	4.3	4.9
	5.0	7.1	7.9
018	2.3	0.9	1.4
	3.4	1.9	2.6
	4.5	3.1	4.0
	6.0	5.1	6.4
024	3.0	1.1	1.2
	4.5	2.2	2.3
	6.0	3.6	3.8
	8.0	6.0	6.2
030	3.8	1.6	1.7
	5.6	3.3	3.4
	7.5	5.4	5.6
	10.0	8.9	9.1
036	4.5	2.2	2.3
	6.8	4.4	4.6
	9.0	7.2	7.5
	12.0	11.9	12.3
042	5.3	2.0	2.2
	7.9	4.1	4.3
	10.5	6.7	7.0
	14.0	11.0	11.5
048	6.0	1.2	1.4
	9.0	2.4	2.7
	12.0	4.0	4.4
	16.0	6.6	7.1
060	7.5	1.8	1.9
	11.3	3.7	3.8
	15.0	6.1	6.3
	20.0	10.1	10.4
070	9.0	2.5	2.6
	13.5	5.1	5.3
	18.0	8.4	8.7
	24.0	14.0	14.4

NOTE: All values based on pure water at 70° F.

Bosch Thermotechnology Corp. reserves the right to make changes without notice due to continuing engineering and technological advances | BTC 771508301 E | 09.2026

Electrical Data - Constant Torque ECM Blower Motor

Model Number	Voltage Code	Voltage/ Hz/ Phase	Voltage Min/Max	Compressor			Blower Motor		Total Unit FLA	Single Point Power			Dual Point Power					
													Compressor Circuit			Blower Motor Circuit		
				Qty	RLA	LRA	FLA	HP		Min. Circuit Amps	MOP CALC	MOP	Min. Circuit Amps	MOP CALC	MOP	Min. Circuit Amps	MOP CALC	MOP
007	1	208-230/1/60	197/253	1	2.7	17.0	2.3	0.25	5.0	5.7	8.4	15	3.4	6.1	15	2.9	5.2	15
009	1	208-230/1/60	197/253	1	3.3	20.0	2.3	0.25	5.6	6.4	9.7	15	4.1	7.4	15	2.9	5.2	15
012	1	208-230/1/60	197/253	1	4.7	27.0	2.3	0.25	7.0	8.2	12.9	15	5.9	10.6	15	2.9	5.2	15

Electrical Data - Constant Airflow ECM Blower Motor

Model Number	Voltage Code	Voltage/ Hz/ Phase	Voltage Min/Max	Compressor			Blower Motor		Total Unit FLA	Single Point Power			Dual Point Power					
													Compressor Circuit			Blower Motor Circuit		
				Qty	RLA	LRA	FLA	HP		Min. Circuit Amps	MOP CALC	MOP	Min. Circuit Amps	MOP CALC	MOP	Min. Circuit Amps	MOP CALC	MOP
015	1	208-230/1/60	197/253	1	5.8	32.0	4.4	0.33	10.2	11.7	17.5	15	7.3	13.1	15	5.5	9.9	15
018	1	208-230/1/60	197/253	1	7.4	39.0	4.4	0.33	11.8	13.7	21.1	20	9.3	16.7	15	5.5	9.9	15
024	1	208-230/1/60	197/253	1	10.3	62.0	4.4	0.33	14.7	17.2	27.5	25	12.8	23.1	20	5.5	9.9	15
030	1	208-230/1/60	197/253	1	14.6	82.0	5.0	0.50	19.6	23.2	37.7	35	18.2	32.7	30	6.3	11.3	15
036	1	208-230/1/60	197/253	1	14.6	90.0	8.4	0.75	23.0	26.6	41.1	40	18.2	32.7	30	10.5	18.9	15
042	1	208-230/1/60	197/253	1	18.2	106.0	8.4	0.75	26.6	31.2	49.4	45	22.8	41.0	40	10.5	18.9	15
048	1	208-230/1/60	197/253	1	18.3	138.0	8.4	0.75	26.7	31.3	49.7	45	22.9	41.3	40	10.5	18.9	15
060	1	208-230/1/60	197/253	1	25.2	147.3	9.1	1.00	34.3	40.6	65.8	60	31.5	56.7	50	11.4	20.5	20
070	1	208-230/1/60	197/253	1	28.0	166.0	9.1	1.00	37.1	44.1	72.1	70	35.0	63.0	60	11.4	20.5	20

Bosch Thermotechnology Corp. reserves the right to make changes without notice due to continuing engineering and technological advances | BTC 771508301 E | 09.2026

Blower Performance CFM - Vertical Unit w/ Constant Torque Motor

Model Number	Fan Speed	Default Factory Motor Setting	External Static Pressure (in. of Water)											
			0.10	0.20	0.30	0.40	0.50	0.60	0.70	0.80	0.90	1.00	1.10	1.20
007	1	FO	213	192	171	154	-	-	-	-	-	-	-	-
	2	DH	306	290	275	260	246	233	217	-	-	-	-	-
	3	FL	345	331	318	304	292	279	267	-	-	-	-	-
	4	FL+100	439	425	412	400	390	380	371	-	-	-	-	-
009	1	FO	232	215	198	183	168	-	-	-	-	-	-	-
	2	DH	328	317	305	293	280	268	258	-	-	-	-	-
	3	FL	368	355	344	334	321	311	301	-	-	-	-	-
	4	FL+100	451	442	434	424	416	406	378	-	-	-	-	-
012	1	FO	278	260	242	225	205	-	-	-	-	-	-	-
	2	DH	402	392	379	365	353	341	328	315	-	-	-	-
	3	FL	436	430	418	406	394	383	372	362	-	-	-	-
	4	FL+100	541	526	523	502	481	459	437	413	-	-	-	-

Note: Off delay = 30 seconds = After receiving an off command motor will continue running for 30 seconds. 007-012 are PIKA Motor. FO - Fan Only. DH - Dehumidification. FL - Full Load. FL+100 - Full Load plus 100 CFM.

Blower Performance CFM - Horizontal Unit w/ Constant Torque Motor

Model Number	Fan Speed	Default Factory Motor Setting	External Static Pressure (in. of Water)											
			0.10	0.20	0.30	0.40	0.50	0.60	0.70	0.80	0.90	1.00	1.10	1.20
007	1	FO	208	188	167	-	-	-	-	-	-	-	-	-
	2	DH	304	290	276	263	248	233	221	-	-	-	-	-
	3	FL	344	331	320	308	295	283	270	-	-	-	-	-
	4	FL+100	441	431	420	411	402	392	382	-	-	-	-	-
009	1	FO	228	204	181	-	-	-	-	-	-	-	-	-
	2	DH	337	321	304	289	272	257	244	-	-	-	-	-
	3	FL	377	363	348	334	320	304	291	-	-	-	-	-
	4	FL+100	465	453	441	429	417	405	394	-	-	-	-	-
012	1	FO	282	265	246	227	211	-	-	-	-	-	-	-
	2	DH	402	389	377	364	350	338	323	311	-	-	-	-
	3	FL	442	428	416	403	392	381	368	356	-	-	-	-
	4	FL+100	541	531	519	507	493	474	449	422	-	-	-	-

Note: Off delay = 30 seconds = After receiving an off command motor will continue running for 30 seconds. 007-012 are PIKA Motor. FO - Fan Only. DH - Dehumidification. FL - Full Load. FL+100 - Full Load plus 100 CFM.

Bosch Thermotechnology Corp. reserves the right to make changes without notice due to continuing engineering and technological advances | BTC 771508301 E | 09.2026

Blower Performance CFM - Vertical Unit w/ Constant Airflow Motor

Model Number	Fan Speed	Default Factory Motor Setting	External Static Pressure (in. of Water)											
			0.10	0.20	0.30	0.40	0.50	0.60	0.70	0.80	0.90	1.00	1.10	1.20
015	A -		425	425	425	425	425	425	425	425	-	-	-	-
	A Norm	X	500	500	500	500	500	500	500	500	-	-	-	-
	A +		575	575	575	575	575	575	575	575	-	-	-	-
018	A -		510	510	510	510	510	510	510	510	-	-	-	-
	A Norm	X	600	600	600	600	600	600	600	600	-	-	-	-
	A +		700	700	700	700	700	700	700	700	-	-	-	-
024	A -		680	680	680	680	680	680	680	680	-	-	-	-
	A Norm (Full)	X	800	800	800	800	800	800	800	800	-	-	-	-
	A +		920	920	920	920	920	920	920	920	-	-	-	-
	A -		510	510	510	510	510	510	510	510	-	-	-	-
	A Norm (Part)	X	600	600	600	600	600	600	600	600	-	-	-	-
	A +		690	690	690	690	690	690	690	690	-	-	-	-
030	A -		808	808	808	808	808	808	808	808	-	-	-	-
	A Norm (Full)	X	950	950	950	950	950	950	950	950	-	-	-	-
	A +		1093	1093	1093	1093	1093	1093	1093	1093	-	-	-	-
	A -		612	612	612	612	612	612	612	612	-	-	-	-
	A Norm (Part)	X	720	720	720	720	720	720	720	720	-	-	-	-
	A +		828	828	828	828	828	828	828	828	-	-	-	-
036	A -		1020	1020	1020	1020	1020	1020	1020	1020	1020	1020	-	-
	A Norm (Full)	X	1200	1200	1200	1200	1200	1200	1200	1200	1200	1200	-	-
	A +		1380	1380	1380	1380	1380	1380	1380	1380	1380	1380	-	-
	A -		765	765	765	765	765	765	765	765	765	765	-	-
	A Norm (Part)	X	900	900	900	900	900	900	900	900	900	900	-	-
	A +		1035	1035	1035	1035	1035	1035	1035	1035	1035	1035	-	-
042	A -		1190	1190	1190	1190	1190	1190	1190	1190	1190	1190	-	-
	A Norm (Full)	X	1400	1400	1400	1400	1400	1400	1400	1400	1400	1400	-	-
	A +		1610	1610	1610	1610	1610	1610	1610	1610	1610	1610	-	-
	A -		952	952	952	952	952	952	952	952	952	952	-	-
	A Norm (Part)	X	1120	1120	1120	1120	1120	1120	1120	1120	1120	1120	-	-
	A +		1288	1288	1288	1288	1288	1288	1288	1288	1288	1288	-	-
048	A -		1360	1360	1360	1360	1360	1360	1360	1360	1360	1360	-	-
	A Norm (Full)	X	1600	1600	1600	1600	1600	1600	1600	1600	1600	1600	-	-
	A +		1840	1840	1840	1840	1840	1840	1840	1840	1840	1840	-	-
	A -		1020	1020	1020	1020	1020	1020	1020	1020	1020	1020	-	-
	A Norm (Part)	X	1200	1200	1200	1200	1200	1200	1200	1200	1200	1200	-	-
	A +		1380	1380	1380	1380	1380	1380	1380	1380	1380	1380	-	-
060	A -		1700	1700	1700	1700	1700	1700	1700	1700	1700	1700	1700	1700
	A Norm (Full)	X	2000	2000	2000	2000	2000	2000	2000	2000	2000	2000	2000	2000
	A +		2300	2300	2300	2300	2300	2300	2300	2300	2300	2300	2300	2300
	A -		1275	1275	1275	1275	1275	1275	1275	1275	1275	1275	1275	1275
	A Norm (Part)	X	1500	1500	1500	1500	1500	1500	1500	1500	1500	1500	1500	1500
	A +		1725	1725	1725	1725	1725	1725	1725	1725	1725	1725	1725	1725
070	A -		1785	1785	1785	1785	1785	1785	1785	1785	1785	1785	1785	1785
	A Norm (Full)	X	2100	2100	2100	2100	2100	2100	2100	2100	2100	2100	2100	2100
	A +		2415	2415	2415	2415	2415	2415	2415	2415	2415	2415	2415	2415
	A -		1403	1403	1403	1403	1403	1403	1403	1403	1403	1403	1403	1403
	A Norm (Part)	X	1650	1650	1650	1650	1650	1650	1650	1650	1650	1650	1650	1650
	A +		1897	1897	1897	1897	1897	1897	1897	1897	1897	1897	1897	1897

Notes: During fan only operation air flow is 69% of tabulated value.
When passive dehumidification mode is enabled air flow is 85% of tabulated value.

Bosch Thermotechnology Corp.
Londonderry, NH • Watertown, MA • Ft. Lauderdale, FL

Bosch Thermotechnology Corp. reserves the right to make changes without notice due to continuing engineering and technological advances | BTC 771508301 E | 09.2026

Tel: 1-800-283-3787 | www.bosch-homecomfort.us

Blower Performance CFM - Horizontal Unit w/ Constant Airflow Motor

Model Number	Fan Speed	Default Factory Motor Setting	External Static Pressure (in. of Water)											
			0.10	0.20	0.30	0.40	0.50	0.60	0.70	0.80	0.90	1.00	1.10	1.20
015	A -		425	425	425	425	425	425	425	425	-	-	-	-
	A Norm	X	500	500	500	500	500	500	500	500	-	-	-	-
	A +		575	575	575	575	575	575	575	575	-	-	-	-
018	A -		510	510	510	510	510	510	510	510	-	-	-	-
	A Norm	X	600	600	600	600	600	600	600	600	-	-	-	-
	A +		700	700	700	700	700	700	700	700	-	-	-	-
024	A -		680	680	680	680	680	680	680	680	-	-	-	-
	A Norm (Full)	X	800	800	800	800	800	800	800	800	-	-	-	-
	A +		920	920	920	920	920	920	920	920	-	-	-	-
	A -		510	510	510	510	510	510	510	510	-	-	-	-
	A Norm (Part)	X	600	600	600	600	600	600	600	600	-	-	-	-
	A +		690	690	690	690	690	690	690	690	-	-	-	-
030	A -		810	810	810	810	810	810	810	810	-	-	-	-
	A Norm (Full)	X	950	950	950	950	950	950	950	950	-	-	-	-
	A +		1100	1100	1100	1100	1100	1100	1100	1100	-	-	-	-
	A -		640	640	640	640	640	640	640	640	-	-	-	-
	A Norm (Part)	X	750	750	750	750	750	750	750	750	-	-	-	-
	A +		860	860	860	860	860	860	860	860	-	-	-	-
036	A -		1020	1020	1020	1020	1020	1020	1020	1020	1020	1020	-	-
	A Norm (Full)	X	1200	1200	1200	1200	1200	1200	1200	1200	1200	1200	-	-
	A +		1380	1380	1380	1380	1380	1380	1380	1380	1380	1380	-	-
	A -		765	765	765	765	765	765	765	765	765	765	-	-
	A Norm (Part)	X	900	900	900	900	900	900	900	900	900	900	-	-
	A +		1035	1035	1035	1035	1035	1035	1035	1035	1035	1035	-	-
042	A -		1230	1230	1230	1230	1230	1230	1230	1230	1230	1230	-	-
	A Norm (Full)	X	1400	1400	1400	1400	1400	1400	1400	1400	1400	1400	-	-
	A +		1610	1610	1610	1610	1610	1610	1610	1610	1610	1610	-	-
	A -		970	970	970	970	970	970	970	970	970	970	-	-
	A Norm (Part)	X	1120	1120	1120	1120	1120	1120	1120	1120	1120	1120	-	-
	A +		1310	1310	1310	1310	1310	1310	1310	1310	1310	1310	-	-
048	A -		1360	1360	1360	1360	1360	1360	1360	1360	1360	1360	-	-
	A Norm (Full)	X	1600	1600	1600	1600	1600	1600	1600	1600	1600	1600	-	-
	A +		1840	1840	1840	1840	1840	1840	1840	1840	1840	1840	-	-
	A -		1020	1020	1020	1020	1020	1020	1020	1020	1020	1020	-	-
	A Norm (Part)	X	1200	1200	1200	1200	1200	1200	1200	1200	1200	1200	-	-
	A +		1380	1380	1380	1380	1380	1380	1380	1380	1380	1380	-	-
060	A -		1700	1700	1700	1700	1700	1700	1700	1700	1700	1700	1700	1700
	A Norm (Full)	X	2000	2000	2000	2000	2000	2000	2000	2000	2000	2000	2000	2000
	A +		2300	2300	2300	2300	2300	2300	2300	2300	2300	2300	2300	2300
	A -		1275	1275	1275	1275	1275	1275	1275	1275	1275	1275	1275	1275
	A Norm (Part)	X	1500	1500	1500	1500	1500	1500	1500	1500	1500	1500	1500	1500
	A +		1725	1725	1725	1725	1725	1725	1725	1725	1725	1725	1725	1725
070	A -		1785	1785	1785	1785	1785	1785	1785	1785	1785	1785	1785	1785
	A Norm (Full)	X	2100	2100	2100	2100	2100	2100	2100	2100	2100	2100	2100	2100
	A +		2415	2415	2415	2415	2415	2415	2415	2415	2415	2415	2415	2415
	A -		1403	1403	1403	1403	1403	1403	1403	1403	1403	1403	1403	1403
	A Norm (Part)	X	1650	1650	1650	1650	1650	1650	1650	1650	1650	1650	1650	1650
	A +		1898	1898	1898	1898	1898	1898	1898	1898	1898	1898	1898	1898

Notes: During fan only operation air flow is 69% of tabulated value.
When passive dehumidification mode is enabled air flow is 85% of tabulated value.

Bosch Thermotechnology Corp. reserves the right to make changes without notice due to continuing engineering and technological advances | BTC 771508301 E | 09.2026

Blower Performance CFM - Counterflow Unit w/ Constant Airflow Motor

Model Number	Fan Speed	Default Factory Motor Setting	External Static Pressure (in. of Water)											
			0.10	0.20	0.30	0.40	0.50	0.60	0.70	0.80	0.90	1.00	1.10	1.20
024	A -		680	680	680	680	680	680	680	680	-	-	-	-
	A Norm (Full)	X	800	800	800	800	800	800	800	800	-	-	-	-
	A +		920	920	920	920	920	920	920	920	-	-	-	-
	A -		510	510	510	510	510	510	510	510	-	-	-	-
	A Norm (Part)	X	600	600	600	600	600	600	600	600	-	-	-	-
	A +		690	690	690	690	690	690	690	690	-	-	-	-
030	A -		808	808	808	808	808	808	808	808	-	-	-	-
	A Norm (Full)	X	950	950	950	950	950	950	950	950	-	-	-	-
	A +		1093	1093	1093	1093	1093	1093	1093	1093	-	-	-	-
	A -		612	612	612	612	612	612	612	612	-	-	-	-
	A Norm (Part)	X	720	720	720	720	720	720	720	720	-	-	-	-
	A +		828	828	828	828	828	828	828	828	-	-	-	-
036	A -		1020	1020	1020	1020	1020	1020	1020	1020	1020	1020	-	-
	A Norm (Full)	X	1200	1200	1200	1200	1200	1200	1200	1200	1200	1200	-	-
	A +		1380	1380	1380	1380	1380	1380	1380	1380	1380	1380	-	-
	A -		765	765	765	765	765	765	765	765	765	765	-	-
	A Norm (Part)	X	900	900	900	900	900	900	900	900	900	900	-	-
	A +		1035	1035	1035	1035	1035	1035	1035	1035	1035	1035	-	-
042	A -		1190	1190	1190	1190	1190	1190	1190	1190	1190	1190	-	-
	A Norm (Full)	X	1400	1400	1400	1400	1400	1400	1400	1400	1400	1400	-	-
	A +		1610	1610	1610	1610	1610	1610	1610	1610	1610	1610	-	-
	A -		952	952	952	952	952	952	952	952	952	952	-	-
	A Norm (Part)	X	1120	1120	1120	1120	1120	1120	1120	1120	1120	1120	-	-
	A +		1288	1288	1288	1288	1288	1288	1288	1288	1288	1288	-	-
048	A -		1360	1360	1360	1360	1360	1360	1360	1360	1360	1360	-	-
	A Norm (Full)	X	1600	1600	1600	1600	1600	1600	1600	1600	1600	1600	-	-
	A +		1840	1840	1840	1840	1840	1840	1840	1840	1840	1840	-	-
	A -		1020	1020	1020	1020	1020	1020	1020	1020	1020	1020	-	-
	A Norm (Part)	X	1200	1200	1200	1200	1200	1200	1200	1200	1200	1200	-	-
	A +		1380	1380	1380	1380	1380	1380	1380	1380	1380	1380	-	-
060	A -		1700	1700	1700	1700	1700	1700	1700	1700	1700	1700	1700	1700
	A Norm (Full)	X	2000	2000	2000	2000	2000	2000	2000	2000	2000	2000	2000	2000
	A +		2300	2300	2300	2300	2300	2300	2300	2300	2300	2300	2300	2300
	A -		1275	1275	1275	1275	1275	1275	1275	1275	1275	1275	1275	1275
	A Norm (Part)	X	1500	1500	1500	1500	1500	1500	1500	1500	1500	1500	1500	1500
	A +		1725	1725	1725	1725	1725	1725	1725	1725	1725	1725	1725	1725
070	A -		1785	1785	1785	1785	1785	1785	1785	1785	1785	1785	1785	1785
	A Norm (Full)	X	2100	2100	2100	2100	2100	2100	2100	2100	2100	2100	2100	2100
	A +		2415	2415	2415	2415	2415	2415	2415	2415	2415	2415	2415	2415
	A -		1403	1403	1403	1403	1403	1403	1403	1403	1403	1403	1403	1403
	A Norm (Part)	X	1650	1650	1650	1650	1650	1650	1650	1650	1650	1650	1650	1650
	A +		1897	1897	1897	1897	1897	1897	1897	1897	1897	1897	1897	1897

Notes: During fan only operation air flow is 69% of tabulated value. When passive dehumidification mode is enabled air flow is 85% of tabulated value.

Bosch Thermotechnology Corp. reserves the right to make changes without notice due to continuing engineering and technological advances | BTC 771508301 E | 09.2026

Physical Data							
Description	Unit	Value					
		007	009	012	015	018	024
Compressor Type	Qty 1	Rotary	Rotary	Rotary	Rotary	Rotary	Scroll
Max Water Working Pressure	PSIG	400	400	400	400	400	400
Fan Motor & Blower							
Constant Torque Fan Motor (HP)	HP	0.25	0.25	0.25	-	-	-
Constant Airflow Fan Motor (HP)	HP	-	-	-	0.33	0.33	0.33
Blower Wheel Size (Dia. x W)	Inch	5x5	5x5	5x5	9x7	9x7	9x7
Water Connection Size							
FPT	Inch	0.75	0.75	0.75	0.75	0.75	0.75
Coaxial Coil Volume	Gal	0.11	0.07	0.11	0.11	0.16	0.28
Vertical Cabinet							
Refrigeration Charge	Oz	21	18	21	23	28	29
Air Coil Dimensions (H x W)	Inch	15x16.5	15x16.5	15x16.5	15x16.5	20x16.5	20x16.5
Standard Filter Size (L x H)	Inch	17x19	17x19	17x19	17x19	18x22	18x22
Weight - Operating	lbs	136	134	145	152	177	197
Weight - Shipping	lbs	164	161	172	180	202	224
Horizontal Cabinet							
Refrigeration Charge	Oz	21	19.5	20	24	27	28
Air Coil Dimensions (H x W)	Inch	14x20	14x20	14x20	14x20	15x22	15x22
Standard Filter Size (L x H)	Inch	16x24	16x24	16x24	16x24	17x25	17x25
Weight - Operating	lbs	144	136	153	155	173	194
Weight - Shipping	lbs	171	164	180	183	198	220
Counterflow Cabinet							
Refrigeration Charge	Oz	-	-	-	-	-	31
Air Coil Dimensions (H x W)	Inch	-	-	-	-	-	20x16.5
Standard Filter Size (L x H)	Inch	-	-	-	-	-	18x22
Weight - Operating	lbs	-	-	-	-	-	193
Weight - Shipping	lbs	-	-	-	-	-	220

Bosch Thermotechnology Corp. reserves the right to make changes without notice due to continuing engineering and technological advances | BTC 771508301 E | 09.2026

Physical Data							
Description	Unit	Value					
		030	036	042	048	060	070
Compressor Type	Qty 1	Scroll	Scroll	Scroll	Scroll	Scroll	Scroll
Max Water Working Pressure	PSIG	400	400	400	400	400	400
Fan Motor & Blower							
Constant Torque Fan Motor (HP)	HP	-	-	-	-	-	-
Constant Airflow Fan Motor (HP)	HP	0.5	0.75	0.75	0.75	1	1
Blower Wheel Size (Dia. x W)	Inch	10x8	10x8	10x8	10x8	11x9	11x9
Water Connection Size							
FPT	Inch	0.75	0.75	0.75	1	1	1
Coaxial Coil Volume	Gal	0.28	0.28	0.38	0.46	0.46	0.46
Vertical Cabinet							
Refrigeration Charge	Oz	32	35	42	51	80	57
Air Coil Dimensions (H x W)	Inch	19x16.5	28x21	28x21	28x21	36x27	36x27
Standard Filter Size (L x H)	Inch	19x27	24x30	24x30	24x30	18x30 (Qty 2)	18x30 (Qty 2)
Weight - Operating	lbs	212	233	271	276	347	323
Weight - Shipping	lbs	238	259	297	301	371	347
Horizontal Cabinet							
Refrigeration Charge	Oz	31	32	48	51	68	55
Air Coil Dimensions (H x W)	Inch	16x27.5	16x27.5	18x31	18x31	20x42	20x45
Standard Filter Size (L x H)	Inch	18x30	18x30	20x34	20x34	20x20 & 20x24	20x24 (Qty 2)
Weight - Operating	lbs	204	205	281	292	319	321
Weight - Shipping	lbs	231	232	307	317	343	345
Counterflow Cabinet							
Refrigeration Charge	Oz	31	31	46	50	78	56.5
Air Coil Dimensions (H x W)	Inch	19x16.5	28x21	28x21	28x21	36x27	36x27
Standard Filter Size (L x H)	Inch	19x27	24x30	24x30	24x30	18x30 (Qty 2)	18x30 (Qty 2)
Weight - Operating	lbs	204	226	274	286	343	326
Weight - Shipping	lbs	230	252	300	311	367	350

Bosch Thermotechnology Corp. reserves the right to make changes without notice due to continuing engineering and technological advances | BTC 771508301 E | 09.2026

Horizontal Cabinet Corner Weights										
Configuration			Left Hand Evaporator				Right Hand Evaporator			
Model	Unit	Total	Left Front*	Right Front*	Left Back	Right Back	Left Front*	Right Front*	Left Back	Right Back
007	Lbs	144.0	39.6	35.4	32.2	36.8	35.4	39.6	36.8	32.2
	kg	65.3	18.0	16.1	14.6	16.7	16.1	18.0	16.7	14.6
009	Lbs	136.6	42.4	33.4	28.2	32.6	33.4	42.4	32.6	28.2
	kg	62.0	19.2	15.1	12.8	14.8	15.1	19.2	14.8	12.8
012	Lbs	153.0	42.4	38.4	33.8	38.4	38.4	42.4	38.4	33.8
	kg	69.4	19.2	17.4	15.3	17.4	17.4	19.2	17.4	15.3
015	Lbs	155.0	44.6	38.2	33.8	38.4	38.2	44.6	38.4	33.8
	kg	70.3	20.2	17.3	15.3	17.4	17.3	20.2	17.4	15.3
018	Lbs	173.0	51.8	41.0	37.2	43.0	41.0	51.8	43.0	37.2
	kg	78.5	23.5	18.6	16.9	19.5	18.6	23.5	19.5	16.9
024	Lbs	193.8	47.2	62.2	47.2	37.2	62.2	47.2	37.2	47.2
	kg	87.9	21.4	28.2	21.4	16.9	28.2	21.4	16.9	21.4
030	Lbs	204.2	50.4	61.6	54.0	38.2	61.6	50.4	38.2	54.0
	kg	92.6	22.9	27.9	24.5	17.3	27.9	22.9	17.3	24.5
036	Lbs	205.2	61.6	46.6	40.6	56.4	46.6	61.6	56.4	40.6
	kg	93.1	27.9	21.1	18.4	25.6	21.1	27.9	25.6	18.4
042	Lbs	281.0	70.4	88.0	78.0	44.6	88.0	70.4	44.6	78.0
	kg	127.5	31.9	39.9	35.4	20.2	39.9	31.9	20.2	35.4
048	Lbs	292.0	77.0	89.8	75.6	49.6	89.8	77.0	49.6	75.6
	kg	132.4	34.9	40.7	34.3	22.5	40.7	34.9	22.5	34.3
060	Lbs	324.2	96.7	91.9	71.1	64.7	91.9	96.7	64.7	71.1
	kg	147.1	43.8	41.7	32.2	29.3	41.7	43.8	29.3	32.2
070	Lbs	320.6	108.4	87.2	51.4	73.6	87.2	108.4	73.6	51.4
	kg	145.4	49.2	39.6	23.3	33.4	39.6	49.2	33.4	23.3

*Front is control box end

Bosch Thermotechnology Corp. reserves the right to make changes without notice due to continuing engineering and technological advances | BTC 771508301 E | 09.2026

Capacity Data 007 (300 CFM)

Cooling

Entering Fluid Temp (°F)	Water flow (GPM)	Pressure Drop (PSI)	Entering Air Temp DB/WB (°F)	Total Capacity (MBTUH)	Sensible Capacity (MBTUH)	Heat of Rejection (MBTUH)	Power Input (kW)	EER
50	1.5	1.0	75/63	8.2	7.0	9.0	0.3	27.2
			80/67	8.5	7.3	9.4	0.3	28.9
			85/71	10.1	5.4	10.6	0.3	35.9
	2.0	1.7	75/63	8.4	7.0	9.2	0.3	29.9
			80/67	8.6	7.3	9.5	0.3	30.9
			85/71	8.9	7.5	9.9	0.3	32.8
	2.5	2.5	75/63	8.4	7.1	9.2	0.3	30.8
			80/67	8.7	7.3	9.6	0.3	32.6
			85/71	9.2	7.6	10.1	0.3	35.4
60	1.5	1.0	75/63	8.0	6.5	8.9	0.3	23.3
			80/67	8.0	7.0	9.0	0.3	23.4
			85/71	8.2	7.2	9.3	0.3	24.2
	2.0	1.7	75/63	7.8	6.9	8.7	0.3	23.8
			80/67	8.2	7.1	9.2	0.3	25.4
			85/71	8.3	7.3	9.4	0.3	25.9
	2.5	2.5	75/63	7.9	6.9	8.8	0.3	24.6
			80/67	8.2	7.1	9.2	0.3	26.0
			85/71	10.0	5.4	10.5	0.3	33.5
70	1.5	1.0	75/63	7.4	6.7	8.4	0.4	19.1
			80/67	7.6	6.9	8.7	0.4	19.7
			85/71	7.9	7.1	9.1	0.4	20.6
	2.0	1.7	75/63	7.3	6.7	8.4	0.4	19.7
			80/67	7.7	6.9	8.8	0.4	20.8
			85/71	8.0	7.2	9.2	0.4	21.8
	2.5	2.5	75/63	7.6	6.8	8.5	0.4	20.8
			80/67	7.8	7.0	8.8	0.4	21.6
			85/71	8.1	7.2	9.3	0.4	22.8
80	1.5	1.0	75/63	7.1	6.4	8.1	0.4	16.5
			80/67	7.3	6.8	8.4	0.4	17.0
			85/71	8.5	5.8	9.4	0.4	19.9
	2.0	1.7	75/63	7.2	6.4	8.2	0.4	17.4
			80/67	7.4	6.8	8.5	0.4	17.9
			85/71	7.7	7.1	9.0	0.4	18.8
	2.5	2.5	75/63	7.3	6.5	8.3	0.4	17.9
			80/67	7.5	6.9	8.7	0.4	18.7
			85/71	7.7	7.1	9.0	0.4	19.3
90	1.5	1.0	75/63	6.6	6.2	7.8	0.5	14.1
			80/67	7.1	6.5	8.3	0.5	15.1
			85/71	7.8	5.9	8.9	0.5	16.6
	2.0	1.7	75/63	6.7	6.3	7.9	0.5	14.7
			80/67	7.2	6.5	8.4	0.5	15.8
			85/71	7.7	6.7	8.9	0.5	16.9
	2.5	2.5	75/63	6.9	6.3	8.0	0.4	15.3
			80/67	7.2	6.7	8.4	0.4	16.0
			85/71	7.8	6.8	8.9	0.4	17.4
100	1.5	1.0	75/63	6.3	6.1	7.5	0.5	12.2
			80/67	6.7	6.3	7.9	0.5	12.8
			85/71	7.1	6.3	8.4	0.5	13.7
	2.0	1.7	75/63	6.4	6.1	7.6	0.5	12.7
			80/67	6.8	6.3	8.0	0.5	13.4
			85/71	7.1	6.8	8.4	0.5	14.0
	2.5	2.5	75/63	6.4	6.1	7.6	0.5	13.0
			80/67	6.8	6.4	8.1	0.5	13.8
			85/71	7.2	6.9	8.5	0.5	14.4
110	1.5	1.0	75/63	5.9	5.9	7.2	0.6	10.4
			80/67	6.2	6.1	7.6	0.6	10.9
			85/71	6.6	6.4	8.0	0.6	11.4
	2.0	1.6	75/63	6.0	6.0	7.3	0.6	10.8
			80/67	6.3	6.2	7.7	0.6	11.4
			85/71	6.7	6.4	8.1	0.6	12.0
	2.5	2.4	75/63	6.0	6.0	7.3	0.5	11.1
			80/67	6.4	6.2	7.7	0.5	11.7
			85/71	6.8	6.4	8.2	0.5	12.3

Heating

Entering Fluid Temp (°F)	Water flow (GPM)	Pressure Drop (PSI)	Entering Air Temp (°F)	Total Capacity (MBTUH)	Heat of Absorption (MBTUH)	Power Input (kW)	COP
30	1.5	1.1	60	5.1	4.0	0.4	3.7
			70	4.8	3.7	0.4	3.2
			80	3.6	2.5	0.4	2.4
	2.0	1.8	60	5.3	4.2	0.4	3.8
			70	5.0	3.8	0.4	3.3
			80	4.6	3.4	0.5	2.9
	2.5	2.6	60	5.4	4.3	0.4	3.9
			70	5.1	3.9	0.4	3.4
			80	4.7	3.5	0.5	2.9
40	1.5	1.0	60	6.1	5.0	0.4	4.3
			70	5.8	4.6	0.5	3.8
			80	5.6	4.3	0.5	3.3
	2.0	1.7	60	6.3	5.2	0.4	4.4
			70	6.1	4.8	0.5	3.9
			80	5.7	4.4	0.5	3.4
	2.5	2.6	60	6.5	5.3	0.4	4.5
			70	6.2	4.9	0.5	3.9
			80	5.9	4.6	0.5	3.5
50	1.5	1.0	60	7.1	5.9	0.4	4.8
			70	6.8	5.6	0.5	4.2
			80	6.6	5.2	0.5	3.8
	2.0	1.7	60	7.3	6.2	0.4	5.0
			70	7.1	5.8	0.5	4.4
			80	6.8	5.4	0.5	3.9
	2.5	2.6	60	7.5	6.3	0.4	5.1
			70	7.2	5.9	0.5	4.4
			80	6.9	5.5	0.5	3.9
60	1.5	1.0	60	8.1	6.9	0.4	5.4
			70	7.8	6.5	0.5	4.7
			80	7.5	6.1	0.5	4.2
	2.0	1.7	60	8.4	7.2	0.4	5.6
			70	8.1	6.8	0.5	4.9
			80	7.8	6.3	0.5	4.3
	2.5	2.5	60	8.6	7.4	0.4	5.7
			70	8.2	6.9	0.5	5.0
			80	7.9	6.5	0.5	4.4
70	1.5	1.0	60	9.1	7.9	0.4	6.0
			70	8.8	7.4	0.5	5.2
			80	8.4	7.0	0.5	4.6
	2.0	1.7	60	9.4	8.2	0.4	6.2
			70	9.1	7.7	0.5	5.4
			80	8.7	7.2	0.5	4.7
	2.5	2.5	60	9.6	8.4	0.4	6.3
			70	9.2	7.9	0.5	5.5
			80	8.9	7.4	0.5	4.8
80	1.5	1.0	60	10.0	8.8	0.4	6.6
			70	9.7	8.3	0.5	5.7
			80	9.3	7.7	0.5	5.0
	2.0	1.7	60	10.4	9.1	0.4	6.8
			70	10.0	8.6	0.5	5.9
			80	9.6	8.1	0.5	5.1
	2.5	2.5	60	10.6	9.4	0.4	7.0
			70	10.2	8.8	0.5	6.0
			80	9.8	8.3	0.5	5.2

Extended Range - Anti-freeze required

AHRI/ISO13256-1 certified performance is rated at entering air conditions of 80.6°F DB and 66.2°F WB in cooling and 68°F DB in heating.

Tabulated unit performance does not include fan or pump power corrections required for AHRI/ISO standard performance ratings.

Unit performance may be interpolated. Extrapolation is not allowed.

For conditions other than rating conditions provided, consult the BST selection software.

Ratings below 40°F are with a methanol solution.

DISCLAIMER: The performance reported herein is based on testing by FHP. Variations in the installation and operational environment may alter performance. Bosch disclaims all warranties, express and implied, that the performance will be as reported, including the warranty of merchantability and fitness for purpose. In addition, continuous research and development may result in a change to an appliances design and specifications at the time of order, which Bosch may change without notice. Before purchase, confirm the design specifications of the appliance.

Capacity Data 009 (330 CFM)

Cooling

Entering Fluid Temp (°F)	Water flow (GPM)	Pressure Drop (PSI)	Entering Air Temp DB/WB (°F)	Total Capacity (MBTUH)	Sensible Capacity (MBTUH)	Heat of Rejection (MBTUH)	Power Input (kW)	EER
50	2.0	3.0	75/63	10.5	8.6	11.7	0.4	27.5
			80/67	11.1	8.9	12.3	0.4	29.5
			85/71	11.9	9.2	13.1	0.4	32.0
	2.5	4.5	75/63	10.6	8.7	11.8	0.4	29.2
			80/67	11.4	9.0	12.5	0.4	31.7
			85/71	12.1	9.3	13.3	0.4	34.5
	3.0	6.3	75/63	10.7	8.7	11.9	0.4	30.4
			80/67	11.5	9.0	12.6	0.3	33.3
			85/71	12.3	9.4	13.4	0.3	36.4
60	2.0	3.0	75/63	10.0	8.4	11.3	0.4	23.0
			80/67	10.4	8.6	11.8	0.4	24.1
			85/71	10.9	8.9	12.4	0.4	25.4
	2.5	4.5	75/63	10.9	7.6	11.9	0.4	26.1
			80/67	11.5	8.1	12.5	0.4	27.9
			85/71	11.5	9.1	12.8	0.4	28.2
	3.0	6.2	75/63	10.9	8.0	11.9	0.4	26.7
			80/67	11.6	8.2	12.6	0.4	29.0
			85/71	12.4	8.0	13.4	0.4	31.9
70	2.0	3.0	75/63	10.2	7.3	11.4	0.5	20.9
			80/67	10.0	8.5	11.5	0.5	20.6
			85/71	10.4	8.7	12.0	0.5	21.6
	2.5	4.4	75/63	9.6	8.2	11.0	0.5	20.3
			80/67	10.1	8.5	11.6	0.5	21.6
			85/71	10.6	8.8	12.1	0.5	22.7
	3.0	6.1	75/63	9.6	8.2	11.0	0.5	20.9
			80/67	10.2	8.5	11.6	0.5	22.3
			85/71	10.8	8.9	12.3	0.5	23.8
80	2.0	2.9	75/63	9.0	8.0	10.5	0.5	16.8
			80/67	9.2	8.2	10.9	0.5	17.2
			85/71	9.7	8.5	11.5	0.5	18.1
	2.5	4.4	75/63	8.9	7.9	10.5	0.5	17.0
			80/67	9.4	8.3	11.1	0.5	18.1
			85/71	10.0	8.6	11.7	0.5	19.1
	3.0	6.0	75/63	9.9	7.2	11.1	0.5	19.2
			80/67	9.5	8.3	11.1	0.5	18.6
			85/71	9.9	8.6	11.7	0.5	19.5
90	2.0	2.9	75/63	8.7	7.6	10.3	0.6	14.7
			80/67	8.9	8.1	10.6	0.6	15.1
			85/71	9.3	8.3	11.1	0.6	15.6
	2.5	4.3	75/63	8.6	7.8	10.2	0.6	15.0
			80/67	9.1	8.1	10.8	0.6	15.8
			85/71	9.4	8.4	11.2	0.6	16.3
	3.0	6.0	75/63	8.7	7.9	10.3	0.6	15.3
			80/67	9.1	8.1	10.8	0.6	16.0
			85/71	9.5	8.4	11.3	0.6	16.7
100	2.0	2.9	75/63	8.2	7.4	9.9	0.6	12.6
			80/67	8.7	7.7	10.4	0.7	13.3
			85/71	9.2	8.0	11.0	0.7	13.9
	2.5	4.3	75/63	8.3	7.5	10.0	0.6	13.1
			80/67	8.9	7.6	10.6	0.6	13.9
			85/71	9.0	8.2	10.9	0.6	14.0
	3.0	5.9	75/63	8.4	7.5	10.0	0.6	13.4
			80/67	8.9	7.8	10.6	0.6	14.1
			85/71	9.1	8.3	11.0	0.6	14.5
110	2.0	2.8	75/63	7.6	7.2	9.5	0.7	10.8
			80/67	8.1	7.5	10.0	0.7	11.3
			85/71	8.6	7.7	10.5	0.7	11.8
	2.5	4.2	75/63	7.7	7.2	9.6	0.7	11.1
			80/67	8.2	7.6	10.1	0.7	11.7
			85/71	8.7	7.8	10.6	0.7	12.3
	3.0	5.8	75/63	7.8	7.3	9.6	0.7	11.4
			80/67	8.3	7.6	10.1	0.7	12.0
			85/71	8.8	8.0	10.7	0.7	12.6

Heating

Entering Fluid Temp (°F)	Water flow (GPM)	Pressure Drop (PSI)	Entering Air Temp (°F)	Total Capacity (MBTUH)	Heat of Absorption (MBTUH)	Power Input (kW)	COP
30	2.0	3.1	60	6.4	5.2	0.4	4.3
			70	6.2	4.9	0.5	3.9
			80	6.0	4.5	0.5	3.5
	2.5	4.7	60	6.6	5.4	0.4	4.4
			70	6.3	5.0	0.5	3.9
			80	6.1	4.7	0.5	3.5
	3.0	6.5	60	6.7	5.5	0.4	4.4
			70	6.5	5.1	0.5	4.0
			80	6.2	4.8	0.5	3.5
40	2.0	3.1	60	7.5	6.3	0.4	4.9
			70	7.3	5.9	0.5	4.4
			80	7.0	5.5	0.5	3.9
	2.5	4.6	60	7.7	6.4	0.5	5.0
			70	7.5	6.0	0.5	4.5
			80	7.1	5.7	0.5	4.0
	3.0	6.4	60	7.8	6.6	0.5	5.1
			70	7.6	6.2	0.5	4.5
			80	7.3	5.8	0.5	4.0
50	2.0	3.1	60	8.6	7.4	0.5	5.5
			70	8.3	6.9	0.5	4.9
			80	8.1	6.5	0.5	4.3
	2.5	4.6	60	8.9	7.6	0.5	5.6
			70	8.5	7.2	0.5	5.0
			80	8.3	6.7	0.5	4.4
	3.0	6.3	60	9.0	7.8	0.5	5.7
			70	8.7	7.3	0.5	5.0
			80	8.4	6.9	0.5	4.5
60	2.0	3.0	60	9.8	8.5	0.5	6.1
			70	9.5	8.0	0.5	5.4
			80	9.1	7.6	0.6	4.8
	2.5	4.5	60	10.1	8.8	0.5	6.3
			70	9.7	8.3	0.5	5.5
			80	9.4	7.8	0.6	4.9
	3.0	6.2	60	10.3	9.0	0.5	6.4
			70	9.9	8.5	0.5	5.6
			80	9.5	8.0	0.6	5.0
70	2.0	3.0	60	11.0	9.7	0.5	6.9
			70	10.6	9.2	0.5	6.0
			80	10.2	8.7	0.6	5.3
	2.5	4.5	60	11.3	10.0	0.5	7.1
			70	10.9	9.5	0.5	6.1
			80	10.5	8.9	0.6	5.4
	3.0	6.2	60	11.5	10.2	0.5	7.2
			70	11.1	9.7	0.5	6.3
			80	10.7	9.1	0.6	5.5
80	2.0	3.0	60	12.1	10.9	0.5	7.6
			70	11.7	10.3	0.5	6.6
			80	11.3	9.7	0.6	5.8
	2.5	4.4	60	12.5	11.2	0.5	7.9
			70	12.0	10.6	0.5	6.8
			80	11.6	10.0	0.6	5.9
	3.0	6.1	60	12.7	11.5	0.5	8.1
			70	12.3	10.9	0.5	6.9
			80	11.8	10.2	0.6	6.0

Extended Range - Anti-freeze required

AHRI/ISO13256-1 certified performance is rated at entering air conditions of 80.6°F DB and 66.2°F WB in cooling and 68°F DB in heating.

Tabulated unit performance does not include fan or pump power corrections required for AHRI/ISO standard performance ratings.

Unit performance may be interpolated. Extrapolation is not allowed.

For conditions other than rating conditions provided, consult the BST selection software.

Ratings below 40°F are with a methanol solution.

DISCLAIMER: The performance reported herein is based on testing by FHP. Variations in the installation and operational environment may alter performance. Bosch disclaims all warranties, express and implied, that the performance will be as reported, including the warranty of merchantability and fitness for purpose. In addition, continuous research and development may result in a change to an appliances design and specifications at the time of order, which Bosch may change without notice. Before purchase, confirm the design specifications of the appliance.

Bosch Thermotechnology Corp. reserves the right to make changes without notice due to continuing engineering and technological advances | BTC 771508301 E | 09.2026

Capacity Data 012 (400 CFM)

Cooling									Heating							
Entering Fluid Temp (°F)	Water flow (GPM)	Pressure Drop (PSI)	Entering Air Temp DB/WB (°F)	Total Capacity (MBTUH)	Sensible Capacity (MBTUH)	Heat of Rejection (MBTUH)	Power Input (kW)	EER	Entering Fluid Temp (°F)	Water flow (GPM)	Pressure Drop (PSI)	Entering Air Temp (°F)	Total Capacity (MBTUH)	Heat of Absorption (MBTUH)	Power Input (kW)	COP
50	2.5	2.5	75/63	13.7	10.2	15.4	0.6	24.2	30	2.5	2.6	60	9.3	7.3	0.7	4.0
			80/67	14.6	10.6	16.3	0.6	26.1				70	9.0	6.9	0.7	3.6
			85/71	15.6	10.8	17.3	0.6	28.2				80	8.7	6.5	0.8	3.3
	3.0	3.5	75/63	13.8	10.3	15.5	0.5	25.2		3.0	3.6	60	9.5	7.5	0.7	4.1
			80/67	14.8	10.6	16.4	0.5	27.3				70	9.1	7.1	0.7	3.7
			85/71	15.8	10.9	17.4	0.5	29.6				80	8.9	6.6	0.8	3.4
	3.5	4.6	75/63	14.0	10.4	15.5	0.5	26.0		3.5	4.8	60	9.6	7.6	0.7	4.1
			80/67	14.9	10.7	16.5	0.5	28.3				70	9.3	7.2	0.7	3.7
			85/71	15.8	11.2	17.4	0.5	30.6				80	9.0	6.7	0.8	3.4
60	2.5	2.5	75/63	13.1	10.0	15.0	0.6	20.9	40	2.5	2.6	60	10.7	8.7	0.7	4.5
			80/67	14.0	10.3	15.9	0.6	22.4				70	10.4	8.2	0.7	4.1
			85/71	14.9	10.6	16.8	0.6	24.0				80	10.1	7.8	0.8	3.7
	3.0	3.5	75/63	13.3	10.1	15.1	0.6	21.7		3.0	3.6	60	10.9	8.9	0.7	4.6
			80/67	14.2	10.4	16.0	0.6	23.3				70	10.6	8.4	0.8	4.1
			85/71	15.1	10.7	16.9	0.6	25.1				80	10.3	7.9	0.8	3.8
	3.5	4.6	75/63	13.4	10.1	15.1	0.6	22.3		3.5	4.7	60	11.1	9.1	0.7	4.6
			80/67	14.3	10.4	16.1	0.6	24.0				70	10.8	8.6	0.8	4.2
			85/71	15.3	10.7	17.0	0.6	26.0				80	10.4	8.1	0.8	3.8
70	2.5	2.5	75/63	12.5	9.7	14.5	0.7	18.1	50	2.5	2.6	60	12.2	10.1	0.7	5.0
			80/67	13.5	9.9	15.4	0.7	19.5				70	11.9	9.6	0.8	4.5
			85/71	14.4	10.1	16.3	0.7	20.8				80	11.6	9.1	0.8	4.1
	3.0	3.4	75/63	12.6	9.8	14.6	0.7	18.7		3.0	3.5	60	12.5	10.4	0.7	5.1
			80/67	13.6	9.9	15.6	0.7	20.2				70	12.1	9.9	0.8	4.6
			85/71	14.5	10.4	16.4	0.7	21.6				80	11.8	9.3	0.8	4.2
	3.5	4.5	75/63	12.6	10.0	14.6	0.7	19.0		3.5	4.7	60	12.7	10.6	0.7	5.1
			80/67	13.7	10.0	15.7	0.7	20.8				70	12.3	10.1	0.8	4.6
			85/71	14.6	10.4	16.5	0.7	22.2				80	12.0	9.5	0.8	4.2
80	2.5	2.4	75/63	11.9	9.5	14.0	0.8	15.8	60	2.5	2.5	60	13.7	11.6	0.7	5.5
			80/67	12.6	10.0	14.8	0.8	16.6				70	13.4	11.1	0.8	4.9
			85/71	13.0	10.3	15.4	0.8	17.1				80	13.1	10.5	0.9	4.5
	3.0	3.4	75/63	12.0	9.5	14.1	0.7	16.3		3.0	3.5	60	14.1	12.0	0.7	5.6
			80/67	12.8	9.8	15.0	0.7	17.3				70	13.7	11.4	0.8	5.0
			85/71	13.6	10.4	15.8	0.7	18.3				80	13.3	10.8	0.9	4.5
	3.5	4.4	75/63	12.1	9.6	14.2	0.7	16.6		3.5	4.6	60	14.3	12.2	0.7	5.7
			80/67	12.9	10.1	15.0	0.7	17.7				70	13.9	11.6	0.8	5.1
			85/71	13.6	10.6	15.8	0.7	18.7				80	13.5	11.0	0.9	4.6
90	2.5	2.4	75/63	11.1	9.4	13.5	0.8	13.6	70	2.5	2.5	60	15.4	13.2	0.8	6.0
			80/67	11.8	9.8	14.2	0.8	14.3				70	15.0	12.6	0.8	5.4
			85/71	13.5	8.2	15.6	0.8	16.2				80	14.5	11.9	0.9	4.8
	3.0	3.3	75/63	11.2	9.5	13.5	0.8	13.9		3.0	3.5	60	15.7	13.6	0.8	6.1
			80/67	11.3	9.6	13.9	0.8	14.1				70	15.4	12.9	0.8	5.5
			85/71	13.7	8.3	15.7	0.8	16.8				80	14.8	12.3	0.9	4.9
	3.5	4.4	75/63	11.6	9.2	13.8	0.8	14.6		3.5	4.5	60	16.0	13.9	0.8	6.2
			80/67	11.9	9.9	14.3	0.8	15.0				70	15.6	13.2	0.8	5.6
			85/71	13.8	8.3	15.8	0.8	17.2				80	15.1	12.5	0.9	5.0
100	2.5	2.4	75/63	10.0	9.0	12.6	0.9	11.4	80	2.5	2.5	60	17.0	14.8	0.8	6.5
			80/67	10.5	9.4	13.3	0.9	11.9				70	16.6	14.2	0.8	5.9
			85/71	12.9	7.4	15.1	0.9	14.2				80	16.1	13.5	0.9	5.3
	3.0	3.3	75/63	11.0	8.5	13.4	0.9	12.6		3.0	3.4	60	17.4	15.3	0.8	6.7
			80/67	10.7	9.4	13.4	0.9	12.2				70	17.0	14.6	0.8	6.0
			85/71	11.2	9.7	14.1	0.9	12.8				80	16.5	13.9	0.9	5.4
	3.5	4.3	75/63	10.1	9.1	12.7	0.9	11.9		3.5	4.5	60	17.8	15.6	0.8	6.8
			80/67	10.7	9.4	13.4	0.9	12.4				70	17.3	14.9	0.8	6.1
			85/71	11.3	9.8	14.2	0.9	13.1				80	16.8	14.1	0.9	5.4
110	2.5	2.3	75/63	9.5	8.8	12.3	1.0	10.0								
			80/67	10.1	9.2	13.0	1.0	10.5								
			85/71	10.5	9.5	13.6	1.0	10.8								
	3.0	3.3	75/63	9.6	8.8	12.4	0.9	10.3								
			80/67	11.4	7.7	13.9	1.0	11.9								
			85/71	10.6	9.5	13.7	1.0	11.1								
	3.5	4.3	75/63	9.7	8.9	12.4	0.9	10.4								
			80/67	10.2	9.2	13.1	0.9	10.9								
			85/71	10.7	9.6	13.7	0.9	11.3								

Extended Range - Anti-freeze required

AHRI/ISO13256-1 certified performance is rated at entering air conditions of 80.6°F DB and 66.2°F WB in cooling and 68°F DB in heating.

Tabulated unit performance does not include fan or pump power corrections required for AHRI/ISO standard performance ratings.

Unit performance may be interpolated. Extrapolation is not allowed.

For conditions other than rating conditions provided, consult the BST selection software.

Ratings below 40°F are with a methanol solution.

DISCLAIMER: The performance reported herein is based on testing by FHP. Variations in the installation and operational environment may alter performance. Bosch disclaims all warranties, express and implied, that the performance will be as reported, including the warranty of merchantability and fitness for purpose. In addition, continuous research and development may result in a change to an appliances design and specifications at the time of order, which Bosch may change without notice. Before purchase, confirm the design specifications of the appliance.

Capacity Data 015 (500 CFM)

Cooling									Heating							
Entering Fluid Temp (°F)	Water flow (GPM)	Pressure Drop (PSI)	Entering Air Temp DB/WB (°F)	Total Capacity (MBTUH)	Sensible Capacity (MBTUH)	Heat of Rejection (MBTUH)	Power Input (kW)	EER	Entering Fluid Temp (°F)	Water flow (GPM)	Pressure Drop (PSI)	Entering Air Temp (°F)	Total Capacity (MBTUH)	Heat of Absorption (MBTUH)	Power Input (kW)	COP
50	2.0	1.7	75/63	15.9	12.3	17.8	0.8	21.0	30	2.0	1.8	60	10.6	8.5	0.8	4.0
			80/67	16.8	12.9	18.8	0.8	22.2				70	10.3	8.0	0.8	3.6
			85/71	18.0	13.1	20.0	0.8	23.8				80	9.9	7.5	0.9	3.3
	3.0	3.5	75/63	16.5	12.4	18.3	0.7	23.7		3.0	3.6	60	11.2	9.1	0.8	4.1
			80/67	17.5	13.0	19.4	0.7	25.4				70	10.9	8.5	0.8	3.8
			85/71	18.6	13.3	20.5	0.7	27.3				80	10.5	8.0	0.9	3.4
	4.0	5.8	75/63	16.8	12.7	18.5	0.7	25.1		4.0	6.0	60	11.6	9.4	0.8	4.2
			80/67	17.8	13.1	19.6	0.7	27.2				70	11.2	8.9	0.9	3.8
			85/71	18.9	13.6	20.7	0.6	29.4				80	10.8	8.3	0.9	3.5
60	2.0	1.7	75/63	15.3	11.9	17.4	0.8	18.3	40	2.0	1.8	60	12.2	10.0	0.8	4.4
			80/67	16.1	12.4	18.3	0.8	19.3				70	11.8	9.5	0.9	4.0
			85/71	17.1	12.7	19.3	0.8	20.4				80	11.5	9.0	0.9	3.7
	3.0	3.5	75/63	15.7	12.3	17.7	0.8	20.2		3.0	3.6	60	13.0	10.7	0.8	4.6
			80/67	16.7	12.7	18.7	0.8	21.6				70	12.5	10.1	0.9	4.2
			85/71	17.9	13.0	19.9	0.8	23.3				80	12.1	9.6	0.9	3.8
	4.0	5.8	75/63	16.0	12.4	17.9	0.7	21.4		4.0	6.0	60	13.4	11.2	0.8	4.8
			80/67	17.1	12.7	19.1	0.7	23.2				70	12.9	10.6	0.9	4.3
			85/71	18.2	13.1	20.2	0.7	24.9				80	12.5	9.9	0.9	3.9
70	2.0	1.7	75/63	14.5	11.7	16.7	0.9	15.8	50	2.0	1.7	60	13.8	11.5	0.8	4.9
			80/67	15.3	12.2	17.7	0.9	16.7				70	13.7	11.1	0.9	4.5
			85/71	16.3	12.5	18.7	0.9	17.7				80	13.3	10.5	1.0	4.1
	3.0	3.4	75/63	14.9	12.0	17.1	0.9	17.4		3.0	3.5	60	14.9	12.6	0.8	5.2
			80/67	16.0	12.3	18.2	0.9	18.7				70	14.6	11.9	0.9	4.7
			85/71	17.0	12.7	19.2	0.9	19.8				80	14.1	11.3	1.0	4.2
	4.0	5.7	75/63	15.3	12.1	17.4	0.8	18.5		4.0	5.9	60	15.5	13.2	0.9	5.3
			80/67	16.3	12.4	18.4	0.8	19.8				70	15.0	12.5	0.9	4.8
			85/71	17.3	12.8	19.5	0.8	21.1				80	14.6	11.7	1.0	4.3
80	2.0	1.6	75/63	13.8	11.4	16.2	1.0	13.9	60	2.0	1.7	60	15.7	13.4	0.9	5.4
			80/67	14.5	12.1	17.1	1.0	14.5				70	15.4	12.7	0.9	4.9
			85/71	14.4	12.3	17.3	1.0	14.3				80	15.0	12.1	1.0	4.4
	3.0	3.4	75/63	14.2	11.7	16.6	0.9	15.2		3.0	3.5	60	16.9	14.5	0.9	5.7
			80/67	15.1	12.0	17.5	0.9	16.1				70	16.4	13.8	0.9	5.1
			85/71	16.3	12.1	18.6	0.9	17.2				80	15.9	13.0	1.0	4.6
	4.0	5.6	75/63	14.5	11.7	16.8	0.9	15.9		4.0	5.8	60	17.5	15.2	0.9	5.8
			80/67	15.4	12.3	17.7	0.9	16.9				70	17.0	14.4	1.0	5.2
			85/71	16.2	12.9	18.6	0.9	17.8				80	16.5	13.6	1.0	4.7
90	2.0	1.6	75/63	12.8	11.4	15.5	1.1	11.9	70	2.0	1.7	60	17.5	15.1	0.9	5.8
			80/67	13.1	11.7	16.1	1.1	12.1				70	17.1	14.5	1.0	5.3
			85/71	13.6	12.0	16.8	1.1	12.4				80	16.7	13.8	1.0	4.8
	3.0	3.3	75/63	13.3	11.6	15.8	1.0	13.0		3.0	3.5	60	18.9	16.4	0.9	6.2
			80/67	14.4	11.6	17.0	1.0	14.0				70	18.4	15.7	1.0	5.6
			85/71	16.3	8.9	18.4	1.0	15.7				80	17.8	14.9	1.0	5.0
	4.0	5.6	75/63	13.8	11.4	16.2	1.0	13.8		4.0	5.8	60	19.6	17.2	0.9	6.4
			80/67	14.5	12.1	17.1	1.0	14.6				70	19.1	16.4	1.0	5.8
			85/71	14.4	12.3	17.4	1.0	14.4				80	18.5	15.6	1.0	5.2
100	2.0	1.6	75/63	11.9	11.0	14.8	1.2	10.3	80	2.0	1.7	60	19.4	17.0	0.9	6.3
			80/67	13.7	9.5	16.3	1.2	11.5				70	19.0	16.3	1.0	5.7
			85/71	14.5	9.4	17.2	1.2	12.1				80	18.5	15.5	1.0	5.2
	3.0	3.3	75/63	13.0	10.6	15.6	1.1	11.6		3.0	3.4	60	20.9	18.5	0.9	6.8
			80/67	13.0	11.6	15.9	1.1	11.6				70	20.3	17.6	1.0	6.1
			85/71	13.4	12.0	16.6	1.1	11.9				80	19.8	16.8	1.1	5.5
	4.0	5.5	75/63	12.8	11.4	15.5	1.1	11.8		4.0	5.7	60	21.8	19.4	0.9	7.0
			80/67	14.5	9.8	16.9	1.1	13.2				70	21.1	18.4	1.0	6.3
			85/71	13.6	12.0	16.7	1.1	12.4				80	20.5	17.5	1.1	5.6
110	2.0	1.6	75/63	11.8	10.0	14.7	1.3	9.3								
			80/67	11.8	11.2	15.1	1.3	9.3								
			85/71	12.4	11.6	15.9	1.3	9.6								
	3.0	3.2	75/63	11.7	10.9	14.6	1.2	9.7								
			80/67	12.3	11.4	15.4	1.2	10.1								
			85/71	12.8	11.8	16.1	1.2	10.4								
	4.0	5.4	75/63	11.9	11.0	14.8	1.2	10.1								
			80/67	12.5	11.4	15.6	1.2	10.5								
			85/71	13.0	11.8	16.3	1.2	10.9								

Extended Range - Anti-freeze required

AHRI/ISO13256-1 certified performance is rated at entering air conditions of 80.6°F DB and 66.2°F WB in cooling and 68°F DB in heating.

Tabulated unit performance does not include fan or pump power corrections required for AHRI/ISO standard performance ratings.

Unit performance may be interpolated. Extrapolation is not allowed.

For conditions other than rating conditions provided, consult the BST selection software.

Ratings below 40°F are with a methanol solution.

DISCLAIMER: The performance reported herein is based on testing by FHP. Variations in the installation and operational environment may alter performance. Bosch disclaims all warranties, express and implied, that the performance will be as reported, including the warranty of merchantability and fitness for purpose. In addition, continuous research and development may result in a change to an appliances design and specifications at the time of order, which Bosch may change without notice. Before purchase, confirm the design specifications of the appliance.

Capacity Data 018 (600 CFM)

Cooling									Heating							
Entering Fluid Temp (°F)	Water flow (GPM)	Pressure Drop (PSI)	Entering Air Temp DB/WB (°F)	Total Capacity (MBTUH)	Sensible Capacity (MBTUH)	Heat of Rejection (MBTUH)	Power Input (kW)	EER	Entering Fluid Temp (°F)	Water flow (GPM)	Pressure Drop (PSI)	Entering Air Temp (°F)	Total Capacity (MBTUH)	Heat of Absorption (MBTUH)	Power Input (kW)	COP
50	2.3	1.1	75/63	20.6	15.8	23.2	0.9	22.2	30	2.3	1.2	60	12.5	9.9	0.9	3.9
			80/67	21.8	16.3	24.4	0.9	23.3				70	12.1	9.4	1.0	3.6
			85/71	23.4	16.4	26.0	0.9	24.8				80	11.8	8.8	1.1	3.3
	3.4	2.2	75/63	21.7	16.0	24.0	0.8	25.7		3.4	2.3	60	13.3	10.6	0.9	4.1
			80/67	23.0	16.4	25.4	0.8	27.3				70	12.9	10.0	1.0	3.7
			85/71	24.4	16.8	26.8	0.8	29.1				80	12.5	9.4	1.1	3.4
	4.8	4.0	75/63	22.2	16.2	24.3	0.8	28.1		4.8	4.2	60	13.8	11.1	1.0	4.2
			80/67	23.6	16.6	25.8	0.8	30.2				70	13.4	10.4	1.0	3.8
			85/71	25.1	17.0	27.3	0.8	32.4				80	12.9	9.8	1.1	3.5
60	2.3	1.1	75/63	19.9	15.1	22.6	1.0	19.4	40	2.3	1.1	60	14.4	11.6	1.0	4.4
			80/67	20.9	15.9	23.8	1.0	20.2				70	14.0	11.0	1.0	4.0
			85/71	22.0	16.4	25.0	1.0	21.1				80	13.7	10.5	1.1	3.6
	3.4	2.2	75/63	20.5	15.8	23.1	0.9	21.8		3.4	2.3	60	15.3	12.5	1.0	4.6
			80/67	21.7	16.3	24.4	0.9	23.0				70	14.9	11.9	1.1	4.1
			85/71	23.4	16.4	26.0	0.9	24.7				80	14.5	11.2	1.1	3.7
	4.8	4.0	75/63	21.0	16.0	23.4	0.9	23.6		4.8	4.1	60	16.0	13.1	1.0	4.7
			80/67	22.6	16.2	25.1	0.9	25.5				70	15.5	12.4	1.1	4.2
			85/71	24.0	16.6	26.5	0.9	27.3				80	15.1	11.8	1.2	3.8
70	2.3	1.1	75/63	18.8	14.9	21.8	1.1	16.9	50	2.3	1.1	60	16.3	13.5	1.0	4.8
			80/67	19.8	15.5	22.9	1.1	17.5				70	16.0	12.9	1.1	4.3
			85/71	21.7	14.6	24.6	1.2	18.8				80	15.6	12.3	1.2	3.9
	3.4	2.2	75/63	19.7	15.0	22.5	1.0	19.0		3.4	2.3	60	17.5	14.5	1.0	5.0
			80/67	20.6	15.8	23.6	1.0	19.8				70	17.1	13.9	1.1	4.5
			85/71	22.5	15.3	25.3	1.1	21.4				80	16.7	13.2	1.2	4.1
	4.8	4.0	75/63	20.2	15.3	22.8	1.0	20.4		4.8	4.1	60	18.3	15.3	1.0	5.2
			80/67	21.3	16.1	24.1	1.0	21.5				70	17.8	14.6	1.1	4.7
			85/71	23.0	16.2	25.7	1.0	23.2				80	17.4	13.9	1.2	4.2
80	2.3	1.1	75/63	18.0	14.4	21.2	1.2	14.8	60	2.3	1.1	60	18.4	15.4	1.0	5.2
			80/67	19.0	15.0	22.3	1.2	15.3				70	18.0	14.8	1.1	4.7
			85/71	18.9	15.3	22.7	1.2	15.2				80	17.7	14.1	1.2	4.3
	3.4	2.2	75/63	18.7	14.7	21.7	1.1	16.5		3.4	2.2	60	19.8	16.7	1.1	5.5
			80/67	19.9	15.1	23.0	1.2	17.3				70	19.3	16.0	1.1	4.9
			85/71	20.7	16.0	24.1	1.2	17.9				80	18.8	15.2	1.2	4.5
	4.8	3.9	75/63	19.1	15.0	22.0	1.1	17.6		4.8	4.0	60	20.7	17.6	1.1	5.7
			80/67	20.1	15.7	23.2	1.1	18.4				70	20.2	16.9	1.2	5.1
			85/71	22.2	14.8	25.0	1.1	20.1				80	19.7	16.0	1.3	4.6
90	2.3	1.1	75/63	17.0	14.0	20.5	1.3	12.9	70	2.3	1.1	60	20.6	17.6	1.1	5.6
			80/67	18.8	12.5	22.0	1.4	13.8				70	20.1	16.8	1.2	5.1
			85/71	17.9	15.0	22.0	1.4	13.2				80	19.7	16.1	1.3	4.6
	3.4	2.1	75/63	17.8	14.3	21.0	1.2	14.3		3.4	2.2	60	22.1	19.0	1.1	6.0
			80/67	19.4	13.5	22.5	1.3	15.3				70	21.6	18.2	1.2	5.4
			85/71	18.8	15.3	22.6	1.3	14.9				80	21.1	17.4	1.3	4.8
	4.8	3.9	75/63	18.2	14.5	21.3	1.2	15.3		4.8	4.0	60	23.3	20.1	1.1	6.2
			80/67	19.3	15.1	22.5	1.2	16.0				70	22.7	19.2	1.2	5.6
			85/71	20.1	15.7	23.6	1.2	16.6				80	22.1	18.3	1.3	5.0
100	2.3	1.0	75/63	15.6	13.8	19.5	1.4	10.9	80	2.3	1.1	60	22.7	19.6	1.1	6.1
			80/67	16.2	14.2	20.4	1.5	11.2				70	22.3	18.9	1.2	5.5
			85/71	16.9	14.6	21.4	1.5	11.5				80	21.8	18.1	1.3	5.0
	3.4	2.1	75/63	16.6	14.2	20.1	1.4	12.2		3.4	2.2	60	24.5	21.4	1.1	6.5
			80/67	17.0	14.5	20.9	1.4	12.4				70	24.0	20.5	1.2	5.8
			85/71	17.7	14.9	21.9	1.4	12.8				80	23.4	19.6	1.3	5.2
	4.8	3.8	75/63	17.1	14.2	20.5	1.3	13.1		4.8	4.0	60	25.8	22.7	1.1	6.8
			80/67	18.6	14.0	22.0	1.3	14.0				70	25.2	21.6	1.2	6.1
			85/71	20.4	12.3	23.5	1.3	15.1				80	24.5	20.6	1.3	5.4
110	2.3	1.0	75/63	14.7	13.4	18.9	1.6	9.5								
			80/67	16.7	11.8	20.6	1.6	10.4								
			Operation Not Recommended													
	3.4	2.1	75/63	16.1	12.6	19.8	1.5	10.9								
			80/67	16.1	14.1	20.3	1.5	10.8								
			85/71	16.7	14.6	21.2	1.5	11.1								
	4.8	3.8	75/63	16.1	13.8	19.8	1.4	11.3								
			80/67	18.0	12.1	21.4	1.5	12.3								
			85/71	17.3	14.8	21.6	1.5	11.9								

Extended Range - Anti-freeze required

AHRI/ISO13256-1 certified performance is rated at entering air conditions of 80.6°F DB and 66.2°F WB in cooling and 68°F DB in heating.

Tabulated unit performance does not include fan or pump power corrections required for AHRI/ISO standard performance ratings.

Unit performance may be interpolated. Extrapolation is not allowed.

For conditions other than rating conditions provided, consult the BST selection software.

Ratings below 40°F are with a methanol solution.

DISCLAIMER: The performance reported herein is based on testing by FHP. Variations in the installation and operational environment may alter performance. Bosch disclaims all warranties, express and implied, that the performance will be as reported, including the warranty of merchantability and fitness for purpose. In addition, continuous research and development may result in a change to an appliances design and specifications at the time of order, which Bosch may change without notice. Before purchase, confirm the design specifications of the appliance.

Capacity Data 024 (800 CFM)

Cooling

Entering Fluid Temp (°F)	Water flow (GPM)	Pressure Drop (PSI)	Entering Air Temp DB/WB (°F)	Total Capacity (MBTUH)	Sensible Capacity (MBTUH)	Heat of Rejection (MBTUH)	Power Input (kW)	EER
50	3.0	1.4	75/63	26.1	20.3	29.4	1.1	23.0
			80/67	28.0	20.7	31.3	1.2	24.3
			85/71	30.0	20.7	33.3	1.2	25.6
	4.5	2.9	75/63	27.2	20.5	30.2	1.0	26.3
			80/67	29.2	20.7	32.2	1.0	28.0
			85/71	31.0	21.6	34.1	1.1	29.5
	6.0	4.9	75/63	27.6	20.7	30.5	1.0	28.2
			80/67	29.6	21.4	32.5	1.0	30.1
			85/71	31.5	21.9	34.4	1.0	31.9
60	3.0	1.4	75/63	25.2	19.6	28.8	1.3	20.0
			80/67	26.7	20.5	30.4	1.3	20.9
			85/71	28.1	21.4	32.0	1.3	21.7
	4.5	2.9	75/63	26.0	20.2	29.3	1.2	22.4
			80/67	27.5	21.1	31.0	1.2	23.5
			85/71	30.0	20.7	33.3	1.2	25.3
	6.0	4.8	75/63	26.6	20.2	29.8	1.1	24.0
			80/67	28.6	20.5	31.8	1.1	25.7
			85/71	30.0	21.7	33.3	1.1	26.9
70	3.0	1.4	75/63	24.0	19.4	28.0	1.4	17.2
			80/67	26.0	19.2	29.9	1.4	18.3
			85/71	26.7	21.0	31.1	1.4	18.6
	4.5	2.9	75/63	25.0	19.5	28.7	1.3	19.4
			80/67	26.5	20.4	30.3	1.3	20.3
			85/71	28.0	21.4	32.0	1.3	21.3
	6.0	4.8	75/63	25.4	19.7	28.9	1.2	20.5
			80/67	27.2	20.4	30.8	1.2	21.8
			85/71	28.6	21.6	32.3	1.3	22.8
80	3.0	1.4	75/63	23.4	18.2	27.6	1.6	15.1
			80/67	24.1	19.8	28.7	1.6	15.4
			85/71	25.3	20.5	30.1	1.6	15.9
	4.5	2.8	75/63	23.8	19.3	27.8	1.4	16.6
			80/67	25.8	19.1	29.8	1.5	17.8
			85/71	27.1	20.3	31.3	1.5	18.5
	6.0	4.7	75/63	24.2	19.4	28.1	1.4	17.5
			80/67	26.0	19.8	29.9	1.4	18.7
			85/71	27.1	21.1	31.3	1.4	19.4
90	3.0	1.4	75/63	21.8	18.5	26.6	1.7	12.8
			80/67	24.4	16.2	28.8	1.8	13.9
			85/71	23.0	19.7	28.6	1.7	13.2
	4.5	2.8	75/63	22.8	18.6	27.2	1.6	14.3
			80/67	24.2	19.2	28.8	1.6	15.0
			85/71	25.1	20.4	30.0	1.6	15.5
	6.0	4.7	75/63	23.4	18.3	27.6	1.5	15.3
			80/67	24.6	19.7	29.0	1.5	15.9
			85/71	25.6	20.5	30.3	1.6	16.5
100	3.0	1.3	75/63	21.5	16.3	26.5	1.9	11.2
			80/67	20.7	18.6	26.6	1.9	10.9
			85/71	21.8	19.3	28.0	1.9	11.4
	4.5	2.8	75/63	21.3	18.5	26.3	1.8	12.0
			80/67	21.6	18.9	27.0	1.8	12.1
			85/71	22.5	19.5	28.3	1.8	12.6
	6.0	4.6	75/63	21.8	18.5	26.6	1.7	12.8
			80/67	22.8	19.4	27.9	1.7	13.3
			85/71	23.1	19.7	28.7	1.7	13.4
110	3.0	1.3	75/63	18.7	17.5	24.9	2.1	9.0
			80/67	22.1	15.3	27.6	2.1	10.3
			85/71	21.0	19.0	27.7	2.1	9.8
	4.5	2.7	75/63	21.4	15.3	26.4	2.0	10.7
			80/67	20.7	18.6	26.6	2.0	10.5
			85/71	21.6	19.2	27.9	2.0	10.9
	6.0	4.5	75/63	21.4	16.3	26.4	1.9	11.2
			80/67	20.9	18.7	26.8	1.9	11.0
			85/71	22.2	19.4	28.2	1.9	11.6

Heating

Entering Fluid Temp (°F)	Water flow (GPM)	Pressure Drop (PSI)	Entering Air Temp (°F)	Total Capacity (MBTUH)	Heat of Absorption (MBTUH)	Power Input (kW)	COP
30	3.0	1.5	60	17.5	13.5	1.3	3.8
			70	17.3	12.9	1.5	3.4
			80	17.2	12.4	1.6	3.1
	4.5	3.0	60	18.5	14.5	1.4	4.0
			70	18.0	14.0	1.5	3.5
			80	18.2	13.1	1.7	3.2
	6.0	5.1	60	19.4	15.2	1.4	4.1
			70	18.5	14.6	1.5	3.6
			80	18.4	13.7	1.7	3.3
40	3.0	1.5	60	20.0	15.9	1.4	4.2
			70	19.6	15.2	1.5	3.8
			80	19.3	14.3	1.7	3.4
	4.5	3.0	60	21.3	17.0	1.4	4.4
			70	20.9	16.1	1.6	3.9
			80	20.4	15.3	1.7	3.5
	6.0	5.0	60	22.0	17.7	1.4	4.5
			70	21.6	16.2	1.6	4.0
			80	21.0	15.9	1.7	3.6
50	3.0	1.5	60	22.6	18.4	1.4	4.6
			70	22.3	17.6	1.6	4.1
			80	21.9	16.8	1.7	3.7
	4.5	3.0	60	24.1	19.9	1.5	4.8
			70	23.7	19.0	1.6	4.3
			80	23.2	18.1	1.8	3.9
	6.0	5.0	60	25.0	20.9	1.5	5.0
			70	24.6	19.7	1.6	4.5
			80	24.0	18.8	1.8	4.0
60	3.0	1.4	60	25.4	21.1	1.5	5.0
			70	25.0	20.2	1.6	4.5
			80	24.6	19.3	1.8	4.1
	4.5	2.9	60	27.3	22.9	1.5	5.3
			70	26.8	21.9	1.7	4.8
			80	26.2	20.9	1.8	4.3
	6.0	4.9	60	28.4	24.0	1.5	5.5
			70	27.9	22.7	1.7	4.9
			80	27.2	21.8	1.8	4.4
70	3.0	1.4	60	28.4	23.9	1.5	5.5
			70	27.9	23.0	1.7	4.9
			80	27.4	22.0	1.8	4.4
	4.5	2.9	60	30.6	26.0	1.6	5.8
			70	29.9	24.8	1.7	5.2
			80	29.3	23.8	1.9	4.6
	6.0	4.8	60	31.9	27.3	1.6	5.9
			70	31.1	26.1	1.7	5.3
			80	30.5	24.9	1.9	4.7
80	3.0	1.4	60	31.4	26.8	1.6	5.9
			70	30.8	25.7	1.7	5.3
			80	30.4	24.7	1.9	4.7
	4.5	2.9	60	34.0	29.3	1.6	6.2
			70	33.3	28.0	1.8	5.6
			80	32.6	26.8	1.9	5.0
	6.0	4.8	60	35.5	30.8	1.6	6.4
			70	34.7	29.3	1.8	5.7
			80	34.0	28.1	2.0	5.1

Extended Range - Anti-freeze required

AHRI/ISO13256-1 certified performance is rated at entering air conditions of 80.6°F DB and 66.2°F WB in cooling and 68°F DB in heating.

Tabulated unit performance does not include fan or pump power corrections required for AHRI/ISO standard performance ratings.

Unit performance may be interpolated. Extrapolation is not allowed.

For conditions other than rating conditions provided, consult the BST selection software.

Ratings below 40°F are with a methanol solution.

DISCLAIMER: The performance reported herein is based on testing by FHP. Variations in the installation and operational environment may alter performance. Bosch disclaims all warranties, express and implied, that the performance will be as reported, including the warranty of merchantability and fitness for purpose. In addition, continuous research and development may result in a change to an appliances design and specifications at the time of order, which Bosch may change without notice. Before purchase, confirm the design specifications of the appliance.

Capacity Data 030 (1000 CFM)

Cooling

Entering Fluid Temp (°F)	Water flow (GPM)	Pressure Drop (PSI)	Entering Air Temp DB/WB (°F)	Total Capacity (MBTUH)	Sensible Capacity (MBTUH)	Heat of Rejection (MBTUH)	Power Input (kW)	EER
50	7.0	6.4	75/63	35.3	25.5	39.9	1.6	22.7
			80/67	37.7	26.2	42.4	1.5	24.6
			85/71	40.2	26.9	44.8	1.5	26.6
	7.5	7.3	75/63	35.4	25.6	40.1	1.5	22.9
			80/67	37.9	26.2	42.5	1.5	24.8
			85/71	40.4	26.9	45.0	1.5	26.9
	8.0	8.2	75/63	35.5	25.7	40.2	1.5	23.1
			80/67	38.0	26.3	42.6	1.5	25.0
			85/71	40.6	27.0	45.1	1.5	27.1
60	7.0	6.4	75/63	33.8	25.0	38.7	1.6	20.6
			80/67	36.2	25.6	41.1	1.6	22.2
			85/71	38.6	26.2	43.5	1.6	24.0
	7.5	7.2	75/63	34.0	25.0	38.8	1.6	20.8
			80/67	36.3	25.7	41.2	1.6	22.5
			85/71	38.8	26.3	43.6	1.6	24.3
	8.0	8.1	75/63	34.1	25.0	38.9	1.6	21.0
			80/67	36.5	25.8	41.3	1.6	22.7
			85/71	39.0	26.3	43.8	1.6	24.6
70	7.0	6.3	75/63	32.4	24.2	37.6	1.8	18.3
			80/67	34.6	24.9	39.9	1.8	19.6
			85/71	37.0	25.6	42.2	1.7	21.1
	7.5	7.1	75/63	32.5	24.3	37.7	1.8	18.5
			80/67	34.8	25.0	40.0	1.7	19.9
			85/71	37.1	25.6	42.3	1.7	21.4
	8.0	8.0	75/63	32.7	24.3	37.8	1.7	18.7
			80/67	34.9	25.0	40.1	1.7	20.1
			85/71	37.3	25.7	42.4	1.7	21.7
80	7.0	6.2	75/63	30.9	23.5	36.5	1.9	15.9
			80/67	33.0	24.3	38.7	1.9	17.1
			85/71	35.3	24.9	41.0	1.9	18.3
	7.5	7.0	75/63	31.0	23.6	36.6	1.9	16.1
			80/67	33.2	24.3	38.8	1.9	17.3
			85/71	35.5	25.0	41.1	1.9	18.6
	8.0	7.9	75/63	31.1	23.8	36.7	1.9	16.3
			80/67	33.3	24.4	38.9	1.9	17.5
			85/71	35.6	25.0	41.2	1.9	18.9
90	7.0	6.1	75/63	29.3	23.0	35.5	2.1	13.7
			80/67	31.4	23.6	37.7	2.1	14.7
			85/71	33.5	24.5	39.8	2.1	15.7
	7.5	6.9	75/63	29.4	23.1	35.6	2.1	13.9
			80/67	31.6	23.7	37.8	2.1	14.9
			85/71	33.7	24.4	39.9	2.1	16.0
	8.0	7.8	75/63	29.5	23.1	35.7	2.1	14.0
			80/67	31.6	23.9	37.8	2.1	15.1
			85/71	33.9	24.4	40.0	2.1	16.2
100	7.0	6.1	75/63	27.8	22.2	34.6	2.4	11.7
			80/67	29.7	23.0	36.7	2.4	12.5
			85/71	31.8	23.7	38.8	2.4	13.4
	7.5	6.8	75/63	27.9	22.3	34.7	2.4	11.8
			80/67	29.9	23.0	36.7	2.4	12.7
			85/71	31.9	23.9	38.8	2.3	13.6
	8.0	7.7	75/63	28.0	22.3	34.8	2.3	12.0
			80/67	30.0	23.1	36.8	2.3	12.8
			85/71	32.0	24.0	38.9	2.3	13.8
110	7.0	6.0	75/63	26.1	21.7	33.7	2.6	9.9
			80/67	28.0	22.3	35.7	2.6	10.6
			85/71	29.9	23.0	37.7	2.6	11.3
	7.5	6.8	75/63	26.2	21.7	33.8	2.6	10.0
			80/67	28.1	22.4	35.8	2.6	10.7
			85/71	30.0	23.3	37.8	2.6	11.5
	8.0	7.6	75/63	26.3	21.8	33.8	2.6	10.1
			80/67	28.2	22.4	35.8	2.6	10.9
			85/71	30.2	23.3	37.8	2.6	11.6

Heating

Entering Fluid Temp (°F)	Water flow (GPM)	Pressure Drop (PSI)	Entering Air Temp (°F)	Total Capacity (MBTUH)	Heat of Absorption (MBTUH)	Power Input (kW)	COP
30	7.0	6.7	60	22.7	18.7	1.6	4.1
			70	22.3	16.9	1.7	3.8
			80	21.8	16.1	1.9	3.4
	7.5	7.5	60	22.8	18.6	1.6	4.1
			70	22.3	17.1	1.7	3.7
			80	22.2	16.3	1.9	3.4
	8.0	8.4	60	23.2	18.4	1.6	4.2
			70	22.5	17.3	1.7	3.8
			80	21.8	16.0	1.9	3.4
40	7.0	6.6	60	26.5	21.2	1.7	4.6
			70	25.7	20.0	1.8	4.2
			80	25.0	19.1	2.0	3.7
	7.5	7.4	60	26.6	21.4	1.7	4.6
			70	25.9	20.2	1.8	4.2
			80	25.2	19.1	2.0	3.7
	8.0	8.3	60	26.8	21.6	1.7	4.6
			70	26.0	20.4	1.8	4.2
			80	25.4	19.1	2.0	3.7
50	7.0	6.5	60	30.2	24.7	1.8	5.0
			70	29.3	23.4	1.9	4.5
			80	28.6	22.3	2.1	4.1
	7.5	7.4	60	30.3	25.1	1.8	5.1
			70	29.5	23.6	1.9	4.6
			80	28.8	22.5	2.1	4.1
	8.0	8.3	60	30.6	25.1	1.8	5.1
			70	29.7	23.8	1.9	4.6
			80	28.9	22.7	2.1	4.1
60	7.0	6.4	60	34.0	28.4	1.8	5.5
			70	33.1	27.0	2.0	4.9
			80	32.4	25.7	2.2	4.4
	7.5	7.3	60	34.3	28.6	1.8	5.5
			70	33.4	27.3	2.0	4.9
			80	32.7	25.9	2.2	4.4
	8.0	8.2	60	34.5	28.9	1.8	5.5
			70	33.6	27.5	2.0	5.0
			80	32.8	26.1	2.2	4.4
70	7.0	6.4	60	38.1	32.1	1.9	5.9
			70	37.2	30.8	2.1	5.3
			80	36.3	29.4	2.2	4.8
	7.5	7.2	60	38.3	32.6	1.9	5.9
			70	37.5	31.1	2.1	5.3
			80	36.6	29.7	2.2	4.8
	8.0	8.1	60	38.6	33.0	1.9	6.0
			70	37.8	31.4	2.1	5.4
			80	36.9	29.9	2.2	4.8
80	7.0	6.3	60	42.2	36.4	1.9	6.4
			70	41.3	34.8	2.1	5.8
			80	40.3	33.2	2.3	5.1
	7.5	7.1	60	42.6	36.8	1.9	6.4
			70	41.7	35.1	2.1	5.8
			80	40.7	33.5	2.3	5.2
	8.0	8.0	60	42.9	37.2	1.9	6.5
			70	42.0	35.4	2.1	5.8
			80	41.0	33.8	2.3	5.2

Extended Range - Anti-freeze required

AHRI/ISO13256-1 certified performance is rated at entering air conditions of 80.6°F DB and 66.2°F WB in cooling and 68°F DB in heating.

Tabulated unit performance does not include fan or pump power corrections required for AHRI/ISO standard performance ratings.

Unit performance may be interpolated. Extrapolation is not allowed.

For conditions other than rating conditions provided, consult the BST selection software.

Ratings below 40°F are with a methanol solution.

DISCLAIMER: The performance reported herein is based on testing by FHP. Variations in the installation and operational environment may alter performance. Bosch disclaims all warranties, express and implied, that the performance will be as reported, including the warranty of merchantability and fitness for purpose. In addition, continuous research and development may result in a change to an appliances design and specifications at the time of order, which Bosch may change without notice. Before purchase, confirm the design specifications of the appliance.

Capacity Data 036 (1200 CFM)

Cooling

Entering Fluid Temp (°F)	Water flow (GPM)	Pressure Drop (PSI)	Entering Air Temp DB/WB (°F)	Total Capacity (MBTUH)	Sensible Capacity (MBTUH)	Heat of Rejection (MBTUH)	Power Input (kW)	EER
50	8.5	9.1	75/63	42.2	31.3	47.4	1.7	25.0
			80/67	45.1	32.4	50.4	1.7	26.6
			85/71	48.1	33.1	53.5	1.7	28.1
	9.0	10.1	75/63	42.3	31.3	47.4	1.7	25.2
			80/67	45.3	32.3	50.5	1.7	26.9
			85/71	48.3	33.2	53.6	1.7	28.4
	9.5	11.1	75/63	42.4	31.4	47.5	1.7	25.5
			80/67	45.4	32.3	50.6	1.7	27.1
			85/71	48.3	33.5	53.7	1.7	28.7
60	8.5	9.0	75/63	40.5	30.6	46.1	1.9	21.8
			80/67	43.4	31.5	49.1	1.9	23.3
			85/71	46.4	32.4	52.2	1.9	24.7
	9.0	9.9	75/63	40.6	30.7	46.2	1.8	22.1
			80/67	43.5	31.6	49.2	1.8	23.5
			85/71	46.5	32.6	52.3	1.9	25.1
	9.5	10.9	75/63	40.6	31.0	46.2	1.8	22.3
			80/67	43.6	31.7	49.3	1.8	23.8
			85/71	46.7	32.5	52.4	1.8	25.3
70	8.5	8.9	75/63	38.7	30.2	44.9	2.0	19.1
			80/67	41.5	30.7	47.7	2.0	20.4
			85/71	44.4	31.7	50.7	2.0	21.7
	9.0	9.8	75/63	39.0	29.9	45.1	2.0	19.3
			80/67	41.6	31.2	47.8	2.0	20.6
			85/71	44.6	31.7	50.9	2.0	21.9
	9.5	10.8	75/63	39.1	30.0	45.2	2.0	19.5
			80/67	41.7	31.3	47.9	2.0	20.8
			85/71	44.8	31.8	51.0	2.0	22.2
80	8.5	8.8	75/63	37.2	29.1	43.9	2.2	16.6
			80/67	39.6	30.4	46.4	2.2	17.7
			85/71	42.5	31.0	49.4	2.2	18.9
	9.0	9.7	75/63	37.3	29.1	44.0	2.2	16.8
			80/67	39.7	30.5	46.5	2.2	17.9
			85/71	42.6	31.0	49.5	2.2	19.1
	9.5	10.7	75/63	37.4	29.2	44.0	2.2	17.0
			80/67	39.8	30.5	46.6	2.2	18.1
			85/71	42.8	31.1	49.5	2.2	19.3
90	8.5	8.6	75/63	35.4	28.3	42.8	2.5	14.3
			80/67	37.7	29.6	45.2	2.5	15.3
			85/71	40.4	30.7	48.0	2.5	16.3
	9.0	9.6	75/63	35.5	28.4	42.8	2.5	14.5
			80/67	38.2	29.1	45.5	2.5	15.6
			85/71	40.6	30.4	48.1	2.5	16.5
	9.5	10.5	75/63	35.6	28.4	42.9	2.4	14.6
			80/67	38.2	29.6	45.6	2.4	15.7
			85/71	40.2	31.4	47.9	2.4	16.5
100	8.5	8.5	75/63	33.6	27.6	41.8	2.7	12.3
			80/67	35.8	29.0	44.1	2.7	13.0
			85/71	35.6	29.9	45.0	2.7	13.0
	9.0	9.5	75/63	33.7	27.6	41.8	2.7	12.4
			80/67	36.2	28.8	44.4	2.7	13.3
			85/71	35.8	29.9	45.0	2.7	13.2
	9.5	10.4	75/63	33.8	27.8	41.9	2.7	12.5
			80/67	36.3	28.8	44.4	2.7	13.4
			85/71	35.2	29.7	44.6	2.7	13.1
110	8.5	8.4	75/63	32.1	26.3	41.1	3.1	10.5
			80/67	35.7	23.4	44.1	3.1	11.6
			85/71	33.3	29.1	43.8	3.1	10.9
	9.0	9.3	75/63	32.2	26.3	41.1	3.0	10.6
			80/67	33.9	28.6	43.2	3.0	11.1
			85/71	33.4	29.1	43.8	3.0	11.0
	9.5	10.3	75/63	31.7	27.5	40.8	3.0	10.5
			80/67	33.6	28.8	43.0	3.0	11.1
			85/71	33.5	29.2	43.8	3.0	11.1

Heating

Entering Fluid Temp (°F)	Water flow (GPM)	Pressure Drop (PSI)	Entering Air Temp (°F)	Total Capacity (MBTUH)	Heat of Absorption (MBTUH)	Power Input (kW)	COP
30	8.5	9.4	60	27.6	21.6	1.9	4.3
			70	27.1	20.5	2.1	3.8
			80	26.6	19.4	2.3	3.4
	9.0	10.4	60	27.7	21.7	1.9	4.3
			70	27.1	20.7	2.1	3.8
			80	26.7	19.4	2.3	3.4
	9.5	11.4	60	27.9	21.9	1.9	4.3
			70	27.3	20.9	2.1	3.9
			80	26.8	19.5	2.3	3.4
40	8.5	9.3	60	31.5	25.3	2.0	4.7
			70	30.9	24.4	2.2	4.2
			80	30.3	22.8	2.4	3.8
	9.0	10.3	60	31.7	25.5	2.0	4.7
			70	31.0	24.5	2.2	4.2
			80	30.4	23.0	2.4	3.8
	9.5	11.3	60	31.8	25.9	2.0	4.8
			70	31.2	24.7	2.2	4.2
			80	30.6	23.1	2.4	3.8
50	8.5	9.2	60	35.7	29.6	2.0	5.2
			70	35.1	27.9	2.2	4.6
			80	34.4	26.7	2.4	4.1
	9.0	10.2	60	36.0	29.9	2.0	5.2
			70	35.1	28.4	2.2	4.6
			80	34.7	26.8	2.4	4.2
	9.5	11.2	60	36.2	30.1	2.0	5.2
			70	35.3	28.6	2.2	4.6
			80	34.8	27.0	2.4	4.2
60	8.5	9.1	60	40.3	34.1	2.1	5.6
			70	39.6	32.2	2.3	5.1
			80	38.7	31.1	2.5	4.5
	9.0	10.1	60	40.6	34.4	2.1	5.6
			70	39.7	32.7	2.3	5.1
			80	39.0	31.3	2.5	4.6
	9.5	11.1	60	41.0	34.3	2.1	5.7
			70	40.0	33.0	2.3	5.1
			80	39.2	31.6	2.5	4.6
70	8.5	9.0	60	45.4	38.6	2.2	6.1
			70	44.2	37.2	2.4	5.5
			80	43.5	35.3	2.6	4.9
	9.0	9.9	60	45.8	38.9	2.2	6.2
			70	44.7	37.2	2.4	5.5
			80	43.9	35.6	2.6	5.0
	9.5	10.9	60	46.1	39.2	2.2	6.2
			70	45.0	37.5	2.4	5.6
			80	44.2	35.8	2.6	5.0
80	8.5	8.9	60	50.6	43.5	2.2	6.6
			70	49.4	41.7	2.4	6.0
			80	48.5	39.9	2.7	5.3
	9.0	9.8	60	51.1	43.8	2.2	6.7
			70	49.8	42.0	2.4	6.0
			80	48.8	40.2	2.7	5.4
	9.5	10.8	60	51.5	44.2	2.2	6.7
			70	50.2	42.3	2.4	6.0
			80	49.2	40.5	2.7	5.4

Extended Range - Anti-freeze required

AHRI/ISO13256-1 certified performance is rated at entering air conditions of 80.6°F DB and 66.2°F WB in cooling and 68°F DB in heating.

Tabulated unit performance does not include fan or pump power corrections required for AHRI/ISO standard performance ratings.

Unit performance may be interpolated. Extrapolation is not allowed.

For conditions other than rating conditions provided, consult the BST selection software.

Ratings below 40°F are with a methanol solution.

DISCLAIMER: The performance reported herein is based on testing by FHP. Variations in the installation and operational environment may alter performance. Bosch disclaims all warranties, express and implied, that the performance will be as reported, including the warranty of merchantability and fitness for purpose. In addition, continuous research and development may result in a change to an appliances design and specifications at the time of order, which Bosch may change without notice. Before purchase, confirm the design specifications of the appliance.

Capacity Data 042 (1400 CFM)

Cooling									Heating							
Entering Fluid Temp (°F)	Water flow (GPM)	Pressure Drop (PSI)	Entering Air Temp DB/WB (°F)	Total Capacity (MBTUH)	Sensible Capacity (MBTUH)	Heat of Rejection (MBTUH)	Power Input (kW)	EER	Entering Fluid Temp (°F)	Water flow (GPM)	Pressure Drop (PSI)	Entering Air Temp (°F)	Total Capacity (MBTUH)	Heat of Absorption (MBTUH)	Power Input (kW)	COP
50	10.0	10.8	75/63	47.9	36.1	54.0	2.0	23.8	30	10.0	11.2	60	33.1	25.8	2.3	4.2
			80/67	51.3	36.8	57.5	2.0	25.1				70	32.3	24.6	2.5	3.7
			85/71	54.8	38.0	61.1	2.1	26.6				80	26.8	20.9	2.7	3.0
	10.5	11.8	75/63	48.0	36.1	54.1	2.0	24.0		10.5	12.2	60	32.9	26.0	2.3	4.2
			80/67	51.4	36.9	57.6	2.0	25.3				70	32.6	24.7	2.5	3.8
			85/71	54.9	38.2	61.2	2.0	26.9				80	32.4	22.9	2.8	3.4
	11.0	12.8	75/63	48.1	36.2	54.2	2.0	24.1		11.0	13.2	60	33.3	26.1	2.3	4.2
			80/67	51.5	37.2	57.7	2.0	25.6				70	32.3	23.5	2.5	3.8
			85/71	55.0	38.2	61.3	2.0	27.1				80	32.3	23.7	2.8	3.4
60	10.0	10.7	75/63	46.3	34.8	52.9	2.2	20.9	40	10.0	11.1	60	37.4	30.0	2.4	4.6
			80/67	49.3	36.2	56.1	2.2	22.1				70	37.1	28.6	2.6	4.1
			85/71	52.7	37.3	59.6	2.2	23.5				80	36.5	26.8	2.9	3.7
	10.5	11.7	75/63	46.0	35.4	52.7	2.2	20.9		10.5	12.1	60	37.7	30.2	2.4	4.6
			80/67	49.4	36.2	56.1	2.2	22.3				70	37.2	28.9	2.6	4.1
			85/71	52.9	37.4	59.7	2.2	23.7				80	36.3	28.0	2.9	3.7
	11.0	12.7	75/63	46.4	35.1	53.0	2.2	21.2		11.0	13.1	60	37.9	30.4	2.4	4.6
			80/67	49.5	36.4	56.2	2.2	22.5				70	37.3	29.1	2.6	4.1
			85/71	53.0	37.4	59.8	2.2	23.9				80	36.5	27.5	2.9	3.7
70	10.0	10.6	75/63	44.3	34.2	51.6	2.4	18.2	50	10.0	10.9	60	42.6	34.7	2.5	5.0
			80/67	47.3	35.5	54.6	2.4	19.3				70	41.7	33.5	2.7	4.5
			85/71	50.6	36.4	58.1	2.5	20.5				80	41.1	31.7	3.0	4.0
	10.5	11.5	75/63	44.4	34.4	51.7	2.4	18.3		10.5	11.9	60	42.8	35.0	2.5	5.0
			80/67	47.3	35.8	54.7	2.4	19.4				70	41.9	33.7	2.7	4.5
			85/71	50.7	36.5	58.2	2.4	20.7				80	41.6	31.8	3.0	4.1
	11.0	12.5	75/63	44.5	34.3	51.7	2.4	18.5		11.0	13.0	60	43.1	35.2	2.5	5.0
			80/67	47.8	35.1	55.0	2.4	19.7				70	42.5	33.6	2.7	4.5
			85/71	50.9	36.5	58.2	2.4	20.9				80	41.7	32.3	3.0	4.1
80	10.0	10.4	75/63	42.4	33.5	50.3	2.7	15.8	60	10.0	10.8	60	48.0	40.0	2.6	5.4
			80/67	45.4	34.5	53.5	2.7	16.8				70	47.3	38.3	2.8	4.9
			85/71	48.4	35.8	56.6	2.7	17.9				80	46.5	36.7	3.1	4.4
	10.5	11.4	75/63	42.5	33.5	50.4	2.7	15.9		10.5	11.8	60	48.3	40.3	2.6	5.5
			80/67	45.5	34.7	53.5	2.7	17.0				70	47.6	38.6	2.8	4.9
			85/71	48.8	35.4	56.9	2.7	18.1				80	46.6	36.9	3.1	4.4
	11.0	12.4	75/63	42.6	33.5	50.5	2.7	16.0		11.0	12.8	60	48.7	40.5	2.6	5.5
			80/67	45.6	34.7	53.6	2.7	17.1				70	47.8	38.8	2.8	4.9
			85/71	48.9	35.4	57.0	2.7	18.3				80	46.8	37.3	3.1	4.4
90	10.0	10.3	75/63	40.4	32.6	49.2	3.0	13.6	70	10.0	10.7	60	53.9	45.6	2.7	5.9
			80/67	43.3	33.9	52.2	3.0	14.5				70	53.0	43.7	2.9	5.3
			85/71	45.6	36.1	54.9	3.0	15.3				80	52.1	41.9	3.2	4.8
	10.5	11.2	75/63	40.5	32.7	49.2	3.0	13.7		10.5	11.7	60	54.2	45.9	2.7	5.9
			80/67	43.4	33.8	52.3	3.0	14.6				70	53.3	44.0	2.9	5.3
			85/71	45.7	36.1	54.9	3.0	15.4				80	52.4	42.2	3.2	4.8
	11.0	12.2	75/63	40.6	32.9	49.2	2.9	13.8		11.0	12.7	60	54.5	46.2	2.7	5.9
			80/67	43.5	33.9	52.3	2.9	14.8				70	53.6	44.3	3.0	5.3
			85/71	45.8	36.1	55.0	3.0	15.5				80	52.8	42.2	3.2	4.8
100	10.0	10.2	75/63	38.0	32.4	47.9	3.3	11.6	80	10.0	10.6	60	60.0	51.4	2.8	6.3
			80/67	41.2	33.1	51.0	3.3	12.4				70	59.0	49.3	3.1	5.7
			85/71	46.9	25.1	55.3	3.4	13.9				80	57.9	47.4	3.3	5.1
	10.5	11.1	75/63	38.9	31.2	48.4	3.3	11.8		10.5	11.5	60	60.4	51.8	2.8	6.3
			80/67	41.3	33.0	51.1	3.3	12.6				70	59.4	49.6	3.1	5.7
			85/71	47.0	25.1	55.3	3.3	14.0				80	58.3	47.7	3.3	5.1
	11.0	12.0	75/63	38.9	31.3	48.4	3.3	11.9		11.0	12.5	60	60.8	52.1	2.8	6.3
			80/67	41.4	33.0	51.1	3.3	12.7				70	59.8	49.9	3.1	5.7
			85/71	47.1	25.2	55.4	3.3	14.1				80	58.6	48.0	3.4	5.1
110	10.0	10.0	75/63	36.0	31.6	46.9	3.7	9.8								
			80/67	35.9	32.4	47.8	3.7	9.8								
			85/71	38.0	33.7	50.4	3.7	10.3								
	10.5	10.9	75/63	36.1	31.6	47.0	3.6	9.9								
			80/67	36.0	32.4	47.8	3.6	9.9								
			85/71	38.1	33.7	50.4	3.7	10.4								
	11.0	11.9	75/63	35.8	31.9	46.8	3.6	9.9								
			80/67	36.0	32.4	47.9	3.6	9.9								
			85/71	38.5	33.8	50.6	3.6	10.6								

Extended Range - Anti-freeze required

AHRI/ISO13256-1 certified performance is rated at entering air conditions of 80.6°F DB and 66.2°F WB in cooling and 68°F DB in heating.

Tabulated unit performance does not include fan or pump power corrections required for AHRI/ISO standard performance ratings.

Unit performance may be interpolated. Extrapolation is not allowed.

For conditions other than rating conditions provided, consult the BST selection software.

Ratings below 40°F are with a methanol solution.

DISCLAIMER: The performance reported herein is based on testing by FHP. Variations in the installation and operational environment may alter performance. Bosch disclaims all warranties, express and implied, that the performance will be as reported, including the warranty of merchantability and fitness for purpose. In addition, continuous research and development may result in a change to an appliances design and specifications at the time of order, which Bosch may change without notice. Before purchase, confirm the design specifications of the appliance.

Capacity Data 048 (1600 CFM)

Cooling

Entering Fluid Temp (°F)	Water flow (GPM)	Pressure Drop (PSI)	Entering Air Temp DB/WB (°F)	Total Capacity (MBTUH)	Sensible Capacity (MBTUH)	Heat of Rejection (MBTUH)	Power Input (kW)	EER
50	11.5	6.7	75/63	52.6	39.6	59.2	2.2	24.2
			80/67	56.0	41.3	62.8	2.2	25.4
			85/71	59.9	42.5	67.0	2.2	26.7
	12.0	7.3	75/63	52.7	39.6	59.3	2.2	24.4
			80/67	56.1	41.4	62.9	2.2	25.7
			85/71	60.1	42.5	67.1	2.2	26.9
	12.5	7.8	75/63	52.8	39.7	59.3	2.1	24.6
			80/67	56.2	41.4	63.0	2.2	25.9
			85/71	60.2	42.5	67.1	2.2	27.1
60	11.5	6.6	75/63	50.5	39.1	57.9	2.4	20.8
			80/67	54.1	40.2	61.7	2.5	22.0
			85/71	57.7	41.6	65.4	2.5	23.1
	12.0	7.2	75/63	50.6	39.1	57.9	2.4	20.9
			80/67	53.9	40.7	61.5	2.4	22.1
			85/71	57.8	41.7	65.5	2.5	23.3
	12.5	7.7	75/63	50.6	39.3	58.0	2.4	21.1
			80/67	54.3	40.5	61.8	2.4	22.3
			85/71	57.8	42.1	65.5	2.5	23.4
70	11.5	6.6	75/63	48.4	38.3	56.5	2.7	18.1
			80/67	51.9	39.4	60.2	2.7	19.2
			85/71	55.2	41.2	63.8	2.7	20.2
	12.0	7.1	75/63	48.5	38.4	56.6	2.7	18.2
			80/67	52.0	39.5	60.3	2.7	19.3
			85/71	55.7	40.7	64.1	2.7	20.4
	12.5	7.6	75/63	48.6	38.5	56.6	2.7	18.3
			80/67	52.1	39.5	60.3	2.7	19.4
			85/71	55.8	40.9	64.2	2.7	20.6
80	11.5	6.5	75/63	46.3	37.6	55.2	2.9	15.7
			80/67	49.3	39.3	58.4	3.0	16.6
			85/71	53.3	39.8	62.5	3.0	17.8
	12.0	7.0	75/63	46.4	37.7	55.2	2.9	15.8
			80/67	49.4	39.3	58.5	3.0	16.7
			85/71	53.4	39.8	62.5	3.0	17.9
	12.5	7.5	75/63	46.5	37.7	55.3	2.9	15.9
			80/67	49.9	38.8	58.8	2.9	17.0
			85/71	53.0	40.8	62.2	3.0	17.9
90	11.5	6.4	75/63	44.2	36.7	53.9	3.2	13.7
			80/67	47.4	38.2	57.3	3.3	14.5
			85/71	49.8	40.6	60.2	3.3	15.2
	12.0	6.9	75/63	44.3	36.7	53.9	3.2	13.8
			80/67	47.1	38.6	57.1	3.2	14.5
			85/71	50.0	40.7	60.3	3.3	15.3
	12.5	7.4	75/63	44.4	36.7	54.0	3.2	13.8
			80/67	47.7	37.9	57.4	3.2	14.8
			85/71	50.6	40.0	60.7	3.2	15.6
100	11.5	6.3	75/63	41.9	35.9	52.7	3.6	11.7
			80/67	44.6	38.1	55.6	3.6	12.4
			85/71	44.1	38.7	56.4	3.6	12.4
	12.0	6.8	75/63	42.0	36.0	52.7	3.6	11.8
			80/67	45.2	37.4	56.0	3.6	12.6
			85/71	44.2	38.7	56.5	3.6	12.5
	12.5	7.3	75/63	42.1	36.0	52.8	3.5	11.9
			80/67	45.2	37.4	56.1	3.6	12.7
			85/71	44.3	38.8	56.5	3.5	12.5
110	11.5	6.2	75/63	39.3	35.7	51.4	4.0	9.9
			80/67	39.8	36.6	52.8	4.0	10.1
			85/71	42.3	38.1	55.7	4.0	10.7
	12.0	6.7	75/63	41.8	30.6	52.8	4.0	10.5
			80/67	40.1	36.7	53.0	3.9	10.2
			85/71	42.3	38.1	55.7	3.9	10.7
	12.5	7.2	75/63	41.8	30.6	52.8	4.0	10.5
			80/67	40.1	36.7	53.0	3.9	10.2
			85/71	42.4	38.1	55.7	3.9	10.8

Heating

Entering Fluid Temp (°F)	Water flow (GPM)	Pressure Drop (PSI)	Entering Air Temp (°F)	Total Capacity (MBTUH)	Heat of Absorption (MBTUH)	Power Input (kW)	COP
30	11.5	7.0	60	38.4	29.8	2.7	4.2
			70	36.5	26.8	2.9	3.7
			80	37.3	27.2	3.2	3.4
	12.0	7.5	60	36.9	28.8	2.7	4.1
			70	38.9	28.7	3.0	3.8
			80	36.2	25.3	3.2	3.3
	12.5	8.1	60	38.8	30.3	2.7	4.2
			70	38.2	28.7	3.0	3.8
			80	37.7	27.7	3.2	3.4
40	11.5	6.9	60	43.4	33.7	2.8	4.6
			70	43.5	33.8	3.1	4.2
			80	41.6	31.1	3.3	3.7
	12.0	7.4	60	44.0	35.4	2.8	4.6
			70	44.5	34.6	3.1	4.2
			80	43.1	32.5	3.3	3.8
	12.5	8.0	60	43.8	35.3	2.8	4.6
			70	43.5	33.9	3.1	4.2
			80	43.2	32.7	3.3	3.8
50	11.5	6.8	60	49.9	41.0	2.9	5.0
			70	49.8	39.3	3.2	4.6
			80	48.3	37.6	3.4	4.1
	12.0	7.3	60	50.1	41.2	2.9	5.1
			70	49.8	38.8	3.2	4.6
			80	47.9	36.8	3.4	4.1
	12.5	7.9	60	50.4	41.0	2.9	5.1
			70	49.9	39.1	3.2	4.6
			80	49.2	38.0	3.5	4.2
60	11.5	6.7	60	56.4	46.7	3.0	5.5
			70	55.6	45.1	3.3	5.0
			80	54.9	43.0	3.6	4.5
	12.0	7.3	60	56.7	47.0	3.0	5.5
			70	55.9	45.3	3.3	5.0
			80	55.2	43.6	3.6	4.5
	12.5	7.8	60	57.0	47.3	3.0	5.5
			70	56.4	45.6	3.3	5.0
			80	55.2	44.0	3.6	4.5
70	11.5	6.6	60	63.4	53.2	3.1	5.9
			70	62.2	51.2	3.4	5.4
			80	61.2	49.3	3.7	4.8
	12.0	7.2	60	63.9	53.6	3.1	6.0
			70	62.5	51.5	3.4	5.4
			80	61.6	49.6	3.7	4.9
	12.5	7.7	60	64.0	53.9	3.2	6.0
			70	62.9	52.1	3.4	5.4
			80	61.9	49.9	3.7	4.9
80	11.5	6.6	60	70.6	59.9	3.3	6.3
			70	69.2	57.7	3.6	5.7
			80	68.2	55.6	3.9	5.2
	12.0	7.1	60	71.0	60.3	3.3	6.3
			70	69.7	58.1	3.6	5.7
			80	68.6	55.9	3.9	5.2
	12.5	7.6	60	71.4	60.7	3.3	6.3
			70	70.0	58.5	3.6	5.7
			80	69.0	56.2	3.9	5.2

Extended Range - Anti-freeze required

AHRI/ISO13256-1 certified performance is rated at entering air conditions of 80.6°F DB and 66.2°F WB in cooling and 68°F DB in heating.

Tabulated unit performance does not include fan or pump power corrections required for AHRI/ISO standard performance ratings.

Unit performance may be interpolated. Extrapolation is not allowed.

For conditions other than rating conditions provided, consult the BST selection software.

Ratings below 40°F are with a methanol solution.

DISCLAIMER: The performance reported herein is based on testing by FHP. Variations in the installation and operational environment may alter performance. Bosch disclaims all warranties, express and implied, that the performance will be as reported, including the warranty of merchantability and fitness for purpose. In addition, continuous research and development may result in a change to an appliances design and specifications at the time of order, which Bosch may change without notice. Before purchase, confirm the design specifications of the appliance.

Capacity Data 060 (2000 CFM)

Cooling

Entering Fluid Temp (°F)	Water flow (GPM)	Pressure Drop (PSI)	Entering Air Temp DB/WB (°F)	Total Capacity (MBTUH)	Sensible Capacity (MBTUH)	Heat of Rejection (MBTUH)	Power Input (kW)	EER
50	14.5	10.1	75/63	68.5	50.3	77.8	3.0	23.0
			80/67	72.9	52.8	82.4	3.0	24.6
			85/71	77.7	53.8	87.2	3.0	25.9
	15.0	10.8	75/63	68.6	50.3	77.9	3.0	23.1
			80/67	73.1	52.9	82.4	2.9	24.8
			85/71	77.8	53.9	87.3	3.0	26.1
	15.5	11.4	75/63	68.7	50.3	77.9	3.0	23.2
			80/67	73.2	53.0	82.5	2.9	25.0
			85/71	77.9	53.9	87.4	3.0	26.2
60	14.5	10.0	75/63	65.9	50.2	76.1	3.2	20.4
			80/67	70.3	51.5	80.6	3.3	21.6
			85/71	74.9	52.9	85.3	3.3	22.8
	15.0	10.6	75/63	66.0	50.2	76.1	3.2	20.5
			80/67	70.5	51.5	80.7	3.2	21.7
			85/71	75.0	53.0	85.4	3.3	22.9
	15.5	11.3	75/63	66.1	50.3	76.2	3.2	20.6
			80/67	70.6	51.6	80.8	3.2	21.8
			85/71	75.2	53.0	85.5	3.3	23.1
70	14.5	9.9	75/63	63.3	48.9	74.4	3.6	17.8
			80/67	67.6	50.5	78.8	3.6	18.9
			85/71	72.2	51.6	83.6	3.6	20.0
	15.0	10.5	75/63	63.5	49.0	74.5	3.5	17.9
			80/67	67.7	50.5	78.9	3.6	19.0
			85/71	72.3	51.7	83.7	3.6	20.1
	15.5	11.1	75/63	63.6	49.0	74.6	3.5	18.0
			80/67	68.1	50.2	79.2	3.6	19.1
			85/71	72.5	51.7	83.8	3.6	20.3
80	14.5	9.8	75/63	60.7	47.6	72.9	3.9	15.6
			80/67	65.0	49.2	77.2	3.9	16.5
			85/71	69.2	50.9	81.6	4.0	17.5
	15.0	10.4	75/63	60.8	47.9	72.9	3.9	15.7
			80/67	65.1	49.2	77.3	3.9	16.6
			85/71	69.4	50.7	81.8	3.9	17.6
	15.5	11.0	75/63	60.9	48.0	72.9	3.9	15.7
			80/67	65.1	49.5	77.3	3.9	16.7
			85/71	69.5	50.7	81.8	3.9	17.7
90	14.5	9.7	75/63	57.9	46.7	71.2	4.3	13.5
			80/67	62.0	48.3	75.5	4.3	14.4
			85/71	66.2	49.8	79.8	4.3	15.2
	15.0	10.3	75/63	58.1	46.7	71.3	4.3	13.6
			80/67	62.1	48.3	75.5	4.3	14.5
			85/71	66.3	49.8	79.9	4.3	15.3
	15.5	10.9	75/63	58.2	46.8	71.3	4.3	13.7
			80/67	62.2	48.4	75.6	4.3	14.5
			85/71	66.4	49.9	79.9	4.3	15.4
100	14.5	9.5	75/63	55.1	45.6	69.8	4.7	11.7
			80/67	59.0	47.2	73.9	4.8	12.4
			85/71	63.1	48.6	78.1	4.8	13.2
	15.0	10.1	75/63	55.2	45.6	69.8	4.7	11.7
			80/67	59.1	47.3	73.9	4.7	12.5
			85/71	63.3	48.6	78.2	4.8	13.3
	15.5	10.7	75/63	55.3	45.6	69.9	4.7	11.8
			80/67	59.2	47.4	73.9	4.7	12.5
			85/71	63.4	48.6	78.3	4.8	13.3
110	14.5	9.4	75/63	52.2	44.6	68.4	5.2	10.0
			80/67	56.1	45.7	72.5	5.3	10.6
			85/71	60.0	47.4	76.6	5.3	11.3
	15.0	10.0	75/63	52.3	44.5	68.5	5.2	10.0
			80/67	56.1	46.1	72.5	5.3	10.7
			85/71	60.1	47.5	76.6	5.3	11.4
	15.5	10.6	75/63	52.4	44.7	68.5	5.2	10.1
			80/67	56.2	46.1	72.5	5.2	10.7
			85/71	60.1	47.8	76.5	5.3	11.4

Heating

Entering Fluid Temp (°F)	Water flow (GPM)	Pressure Drop (PSI)	Entering Air Temp (°F)	Total Capacity (MBTUH)	Heat of Absorption (MBTUH)	Power Input (kW)	COP
30	14.5	10.5	60	45.8	35.9	3.1	4.4
			70	45.5	34.6	3.4	4.0
			80	45.1	33.2	3.7	3.6
	15.0	11.1	60	46.0	36.1	3.1	4.4
			70	45.6	34.8	3.4	4.0
			80	45.3	33.3	3.7	3.6
	15.5	11.8	60	46.1	36.2	3.1	4.4
			70	45.9	34.8	3.4	4.0
			80	45.4	33.4	3.7	3.6
40	14.5	10.4	60	49.6	39.7	3.1	4.7
			70	50.9	39.8	3.5	4.3
			80	51.0	38.5	3.8	3.9
	15.0	11.0	60	49.8	40.8	3.1	4.7
			70	50.9	40.1	3.5	4.3
			80	51.3	38.6	3.8	4.0
	15.5	11.7	60	49.7	40.6	3.1	4.7
			70	51.5	39.9	3.5	4.4
			80	51.5	38.8	3.8	4.0
50	14.5	10.3	60	57.8	46.6	3.2	5.2
			70	55.7	45.3	3.5	4.6
			80	54.7	43.1	3.9	4.1
	15.0	10.9	60	57.7	47.4	3.2	5.2
			70	48.7	37.9	3.4	4.2
			80	55.4	43.7	3.9	4.2
	15.5	11.5	60	57.2	46.6	3.2	5.2
			70	53.6	35.7	3.4	4.6
			80	56.8	43.9	3.9	4.3
60	14.5	10.1	60	65.6	55.0	3.4	5.7
			70	63.9	51.9	3.7	5.1
			80	62.1	49.9	4.0	4.5
	15.0	10.8	60	65.5	54.5	3.4	5.7
			70	56.2	42.1	3.5	4.7
			80	63.2	50.4	4.0	4.6
	15.5	11.4	60	63.9	60.5	3.4	5.5
			70	64.5	52.2	3.7	5.1
			80	62.7	50.2	4.0	4.6
70	14.5	10.0	60	73.6	62.2	3.5	6.1
			70	72.6	59.8	3.8	5.6
			80	76.9	59.2	4.2	5.4
	15.0	10.6	60	74.3	63.5	3.5	6.2
			70	72.7	60.2	3.8	5.6
			80	61.4	51.1	4.0	4.5
	15.5	11.3	60	73.3	62.3	3.5	6.1
			70	73.7	61.8	3.9	5.6
			80	71.3	57.8	4.2	5.0
80	14.5	9.9	60	82.4	70.6	3.6	6.6
			70	80.5	68.2	4.0	6.0
			80	75.9	61.7	4.3	5.2
	15.0	10.5	60	83.8	71.0	3.7	6.7
			70	81.9	68.9	4.0	6.0
			80	79.4	65.5	4.3	5.4
	15.5	11.1	60	89.7	71.0	3.7	7.2
			70	81.9	68.6	4.0	6.0
			80	80.0	66.0	4.3	5.4

Extended Range - Anti-freeze required

AHRI/ISO13256-1 certified performance is rated at entering air conditions of 80.6°F DB and 66.2°F WB in cooling and 68°F DB in heating.

Tabulated unit performance does not include fan or pump power corrections required for AHRI/ISO standard performance ratings.

Unit performance may be interpolated. Extrapolation is not allowed.

For conditions other than rating conditions provided, consult the BST selection software.

Ratings below 40°F are with a methanol solution.

DISCLAIMER: The performance reported herein is based on testing by FHP. Variations in the installation and operational environment may alter performance. Bosch disclaims all warranties, express and implied, that the performance will be as reported, including the warranty of merchantability and fitness for purpose. In addition, continuous research and development may result in a change to an appliances design and specifications at the time of order, which Bosch may change without notice. Before purchase, confirm the design specifications of the appliance.

Capacity Data 070 (2100 CFM)

Cooling									Heating							
Entering Fluid Temp (°F)	Water flow (GPM)	Pressure Drop (PSI)	Entering Air Temp DB/WB (°F)	Total Capacity (MBTUH)	Sensible Capacity (MBTUH)	Heat of Rejection (MBTUH)	Power Input (kW)	EER	Entering Fluid Temp (°F)	Water flow (GPM)	Pressure Drop (PSI)	Entering Air Temp (°F)	Total Capacity (MBTUH)	Heat of Absorption (MBTUH)	Power Input (kW)	COP
50	16.5	12.8	75/63	74.4	54.6	85.1	3.4	21.9	30	16.5	13.2	60	54.2	41.8	3.9	4.1
			80/67	79.6	55.9	90.6	3.5	23.0				70	53.4	40.1	4.2	3.7
			85/71	84.8	57.9	96.1	3.5	24.3				80	52.6	37.4	4.6	3.4
	17.0	13.4	75/63	74.7	54.1	85.4	3.4	21.9		17.0	13.9	60	54.3	41.9	3.9	4.1
			80/67	79.7	55.9	90.7	3.4	23.1				70	53.5	40.2	4.2	3.7
			85/71	85.2	57.2	96.4	3.5	24.3				80	53.0	38.1	4.6	3.4
	17.5	14.2	75/63	74.6	54.6	85.3	3.4	22.0		17.5	14.6	60	54.4	42.0	3.9	4.1
			80/67	79.8	56.0	90.7	3.4	23.2				70	53.6	40.3	4.2	3.7
			85/71	85.3	57.4	96.5	3.5	24.4				80	52.8	38.4	4.6	3.4
60	16.5	12.6	75/63	72.0	52.9	83.6	3.7	19.3	40	16.5	13.0	60	61.4	48.3	4.0	4.5
			80/67	77.1	53.8	89.0	3.8	20.4				70	60.4	46.6	4.4	4.0
			85/71	82.1	56.2	94.2	3.8	21.5				80	59.7	44.5	4.8	3.7
	17.0	13.3	75/63	72.0	53.3	83.6	3.7	19.4		17.0	13.7	60	61.6	48.4	4.0	4.5
			80/67	77.2	53.9	89.0	3.8	20.4				70	60.7	46.4	4.4	4.1
			85/71	82.2	56.2	94.3	3.8	21.6				80	59.9	44.6	4.8	3.7
	17.5	14.0	75/63	72.1	53.3	83.7	3.7	19.5		17.5	14.5	60	61.7	48.6	4.0	4.5
			80/67	77.3	53.9	89.1	3.8	20.5				70	60.8	46.5	4.4	4.1
			85/71	82.3	56.3	94.4	3.8	21.7				80	60.0	44.8	4.8	3.7
70	16.5	12.4	75/63	69.2	52.0	81.8	4.1	17.1	50	16.5	12.9	60	69.4	55.8	4.2	4.9
			80/67	74.0	53.5	86.9	4.1	18.1				70	68.3	53.7	4.6	4.4
			85/71	78.9	55.3	92.1	4.1	19.1				80	67.6	52.5	5.0	4.0
	17.0	13.1	75/63	69.3	52.0	81.9	4.0	17.1		17.0	13.6	60	69.6	56.0	4.2	4.9
			80/67	74.1	53.8	87.0	4.1	18.2				70	68.5	53.9	4.6	4.4
			85/71	79.0	55.3	92.2	4.1	19.2				80	67.7	52.7	5.0	4.0
	17.5	13.8	75/63	69.4	51.9	82.0	4.0	17.2		17.5	14.3	60	69.5	56.5	4.2	4.8
			80/67	74.2	53.8	87.0	4.1	18.3				70	68.5	54.2	4.6	4.4
			85/71	79.2	55.4	92.2	4.1	19.3				80	67.9	52.9	5.0	4.0
80	16.5	12.3	75/63	66.2	50.6	80.0	4.4	14.9	60	16.5	12.7	60	78.2	63.8	4.4	5.2
			80/67	71.0	52.2	85.0	4.5	15.9				70	76.8	61.6	4.8	4.7
			85/71	75.7	53.9	90.0	4.5	16.8				80	75.6	59.0	5.2	4.3
	17.0	13.0	75/63	66.3	50.7	80.1	4.4	15.0		17.0	13.4	60	78.1	64.5	4.4	5.2
			80/67	71.1	52.2	85.1	4.5	15.9				70	77.0	61.8	4.8	4.7
			85/71	76.1	53.8	90.3	4.5	16.9				80	75.9	59.2	5.2	4.3
	17.5	13.7	75/63	66.3	50.8	80.1	4.4	15.1		17.5	14.1	60	78.4	64.7	4.4	5.2
			80/67	71.2	52.4	85.1	4.4	16.0				70	77.3	62.1	4.8	4.7
			85/71	76.2	53.8	90.4	4.5	17.0				80	76.1	59.4	5.2	4.3
90	16.5	12.1	75/63	63.2	49.6	78.2	4.9	13.0	70	16.5	12.6	60	87.6	72.6	4.6	5.6
			80/67	67.6	51.3	83.1	4.9	13.8				70	85.8	69.8	5.0	5.0
			85/71	72.6	52.4	88.2	5.0	14.7				80	84.5	66.9	5.4	4.6
	17.0	12.8	75/63	63.3	49.6	78.3	4.9	13.0		17.0	13.3	60	87.9	73.0	4.6	5.6
			80/67	68.0	51.0	83.3	4.9	13.9				70	86.1	70.1	5.0	5.1
			85/71	72.8	52.5	88.2	4.9	14.7				80	84.8	67.5	5.4	4.6
	17.5	13.5	75/63	63.4	49.7	78.3	4.8	13.1		17.5	14.0	60	88.3	73.2	4.6	5.6
			80/67	68.1	51.1	83.3	4.9	14.0				70	86.4	70.4	5.0	5.1
			85/71	72.8	52.7	88.3	4.9	14.8				80	85.1	67.7	5.4	4.6
100	16.5	12.0	75/63	60.0	48.1	76.6	5.4	11.2	80	16.5	12.5	60	97.6	81.9	4.8	5.9
			80/67	64.5	49.6	81.4	5.4	11.9				70	95.8	79.4	5.2	5.4
			85/71	69.1	51.3	86.2	5.5	12.7				80	93.9	75.6	5.7	4.8
	17.0	12.6	75/63	60.1	48.2	76.7	5.4	11.2		17.0	13.1	60	98.1	82.2	4.8	6.0
			80/67	64.6	49.8	81.4	5.4	12.0				70	95.9	79.1	5.2	5.4
			85/71	69.3	51.3	86.2	5.4	12.7				80	94.1	75.8	5.7	4.9
	17.5	13.3	75/63	60.1	48.6	76.8	5.3	11.3		17.5	13.8	60	98.1	83.0	4.8	5.9
			80/67	64.9	49.5	81.6	5.4	12.1				70	96.6	79.5	5.2	5.4
			85/71	69.4	51.3	86.3	5.4	12.8				80	94.5	76.1	5.7	4.9
110	16.5	11.8	75/63	57.2	46.2	75.5	6.0	9.6								
			80/67	60.6	49.3	79.6	6.0	10.1								
			85/71	66.7	46.6	84.9	6.1	11.0								
	17.0	12.5	75/63	56.7	47.4	75.3	5.9	9.6								
			80/67	60.2	50.2	79.3	6.0	10.1								
			85/71	66.8	46.7	84.9	6.0	11.1								
	17.5	13.1	75/63	56.8	47.2	75.1	5.9	9.6								
			80/67	61.3	48.6	80.0	6.0	10.3								
			85/71	66.9	46.7	85.0	6.0	11.1								

Extended Range - Anti-freeze required

AHRI/ISO13256-1 certified performance is rated at entering air conditions of 80.6°F DB and 66.2°F WB in cooling and 68°F DB in heating.

Tabulated unit performance does not include fan or pump power corrections required for AHRI/ISO standard performance ratings.

Unit performance may be interpolated. Extrapolation is not allowed.

For conditions other than rating conditions provided, consult the BST selection software.

Ratings below 40°F are with a methanol solution.

DISCLAIMER: The performance reported herein is based on testing by FHP. Variations in the installation and operational environment may alter performance. Bosch disclaims all warranties, express and implied, that the performance will be as reported, including the warranty of merchantability and fitness for purpose. In addition, continuous research and development may result in a change to an appliances design and specifications at the time of order, which Bosch may change without notice. Before purchase, confirm the design specifications of the appliance.

007 - Temperature Pressure Operating Data

Enter Fluid Temp (°F)	Water Flow (GPM)	Cooling				Heating			
		Suction Pressure (PSIG)	Discharge Pressure (PSIG)	Water Temp Rise (°F)	Air Temp Drop (°F)	Suction Pressure (PSIG)	Discharge Pressure (PSIG)	Water Temp Drop (°F)	Air Temp Rise (°F)
30	1.4	Operation Not Recommended				69-79	227-237	5-6	15-19
	2.0					72-82	228-238	4-5	15-19
40	1.4	115-138	148-180	11-17	19-23	84-94	236-246	7-8	18-22
	2.0	115-137	142-171	8-12	19-23	88-98	238-248	5-6	18-22
50	1.4	115-141	164-204	12-16	19-23	101-111	246-256	8-9	20-24
	2.0	115-139	158-195	8-11	18-23	105-115	249-259	6-7	21-25
60	1.4	115-143	190-238	11-16	18-22	116-126	256-266	9-10	23-27
	2.0	116-142	185-228	8-11	18-22	121-131	259-269	6-7	24-28
70	1.4	117-146	219-274	11-14	18-21	132-142	266-276	10-11	25-29
	2.0	117-146	214-264	8-11	19-22	138-148	270-280	7-8	26-30
80	1.4	118-150	251-313	10-16	18-22	150-160	278-288	11-12	28-32
	2.0	118-149	248-305	7-10	18-22	158-168	283-293	8-9	30-34
90	1.4	119-153	287-357	10-14	18-21	170-180	291-301	13-14	31-35
	2.0	119-152	286-350	7-10	18-21	Operation Not Recommended			
100	1.4	121-157	328-405	9-14	17-21				
	2.0	121-156	328-398	6-9	17-21				

009 - Temperature Pressure Operating Data

Enter Fluid Temp (°F)	Water Flow (GPM)	Cooling				Heating			
		Suction Pressure (PSIG)	Discharge Pressure (PSIG)	Water Temp Rise (°F)	Air Temp Drop (°F)	Suction Pressure (PSIG)	Discharge Pressure (PSIG)	Water Temp Drop (°F)	Air Temp Rise (°F)
30	1.8	Operation Not Recommended				61-81	217-273	5-6	16-20
	2.5					64-85	219-276	4-5	16-20
40	1.8	111-136	156-188	11-16	19-24	75-98	227-287	6-7	18-23
	2.5	111-135	149-179	8-11	19-24	77-102	229-289	4-5	19-24
50	1.8	112-138	180-220	11-15	19-24	90-117	238-301	7-9	21-27
	2.5	112-136	174-211	8-12	19-24	92-121	240-304	5-6	21-27
60	1.8	113-140	208-255	11-15	19-24	107-138	251-317	8-10	24-31
	2.5	113-138	201-246	8-11	19-24	110-143	254-322	6-7	24-31
70	1.8	115-143	238-292	11-14	18-23	126-160	265-335	9-12	26-34
	2.5	115-142	232-284	8-11	18-23	130-167	268-340	7-8	27-35
80	1.8	116-145	272-334	10-14	18-22	145-183	280-354	11-13	30-38
	2.5	117-144	266-325	7-10	18-23	152-192	285-360	8-9	30-39
90	1.8	118-148	310-379	9-14	17-22	Operation Not Recommended			
	2.5	118-147	305-371	7-9	17-22				
100	1.8	120-151	351-428	9-12	17-21				
	2.5	121-150	347-420	6-9	17-21				

Bosch Thermotechnology Corp. reserves the right to make changes without notice due to continuing engineering and technological advances | BTC 771508301 E | 09.2026

012 - Temperature Pressure Operating Data

Enter Fluid Temp (°F)	Water Flow (GPM)	Cooling				Heating			
		Suction Pressure (PSIG)	Discharge Pressure (PSIG)	Water Temp Rise (°F)	Air Temp Drop (°F)	Suction Pressure (PSIG)	Discharge Pressure (PSIG)	Water Temp Drop (°F)	Air Temp Rise (°F)
30	2.0	Operation Not Recommended				61-77	230-289	6-7	19-22
	3.0					64-81	233-294	4-5	20-23
40	2.0	109-135	151-193	14-18	22-26	74-93	242-304	7-8	22-26
	3.0	109-134	141-180	10-11	22-27	78-98	246-310	5-6	23-27
50	2.0	109-137	175-224	14-18	22-25	81-117	256-321	9-10	25-29
	3.0	109-136	164-210	10-11	22-26	86-124	262-328	6-7	27-31
60	2.0	110-139	201-257	13-18	22-26	104-128	271-339	10-12	28-33
	3.0	110-138	191-244	9-11	22-26	111-137	278-347	7-8	29-35
70	2.0	112-142	231-294	13-17	22-25	121-149	287-358	11-13	31-37
	3.0	112-140	221-281	9-12	21-25	130-158	295-368	7-9	33-39
80	2.0	113-144	263-334	12-17	21-25	140-170	306-380	12-14	35-41
	3.0	113-143	254-321	8-11	21-25	151-182	316-392	8-10	37-44
90	2.0	115-147	299-379	12-16	21-24	Operation Not Recommended			
	3.0	115-146	291-367	8-11	20-24				
100	2.0	116-149	338-428	12-15	20-24				
	3.0	117-148	333-417	8-11	20-24				

015 - Temperature Pressure Operating Data

Enter Fluid Temp (°F)	Water Flow (GPM)	Cooling				Heating			
		Suction Pressure (PSIG)	Discharge Pressure (PSIG)	Water Temp Rise (°F)	Air Temp Drop (°F)	Suction Pressure (PSIG)	Discharge Pressure (PSIG)	Water Temp Drop (°F)	Air Temp Rise (°F)
30	2.5	Operation Not Recommended				60-76	240-295	6-7	20-22
	3.8					63-80	244-299	4-5	20-23
40	2.5	106-133	156-197	13-19	22-26	72-91	253-310	7-8	22-25
	3.8	106-132	145-183	9-12	22-26	77-97	257-316	5-5	23-26
50	2.5	106-135	180-227	13-19	21-25	79-116	267-327	9-10	26-29
	3.8	106-134	169-213	9-12	21-26	84-122	273-334	6-7	26-30
60	2.5	107-137	207-261	13-18	21-25	101-126	283-345	10-11	28-32
	3.8	107-136	196-247	9-12	21-25	109-135	290-354	7-8	30-34
70	2.5	109-140	237-298	13-17	21-25	118-146	300-366	11-12	32-36
	3.8	109-139	226-284	8-11	21-25	127-156	310-377	8-9	33-38
80	2.5	110-143	270-338	12-17	21-24	138-168	320-388	13-14	35-40
	3.8	110-141	260-325	8-11	20-24	148-180	331-401	9-10	37-43
90	2.5	112-145	306-383	12-16	20-24	158-191	342-413	14-16	39-44
	3.8	112-144	298-371	8-10	20-24	Operation Not Recommended			
100	2.5	113-147	346-434	11-16	20-23				
	3.8	114-147	339-421	8-9	19-23				

Bosch Thermotechnology Corp. reserves the right to make changes without notice due to continuing engineering and technological advances | BTC 771508301 E | 09.2026

018 - Temperature Pressure Operating Data

Enter Fluid Temp (°F)	Water Flow (GPM)	Cooling				Heating			
		Suction Pressure (PSIG)	Discharge Pressure (PSIG)	Water Temp Rise (°F)	Air Temp Drop (°F)	Suction Pressure (PSIG)	Discharge Pressure (PSIG)	Water Temp Drop (°F)	Air Temp Rise (°F)
30	3.0	Operation Not Recommended				57-67	250-270	6-7	18-22
	5.0					63-73	256-276	4-5	20-24
40	3.0	109-127	177-197	15-18	23-27	70-80	264-284	7-8	21-25
	5.0	108-126	159-179	9-12	23-27	77-87	271-291	4-5	23-27
50	3.0	111-129	204-224	15-18	22-26	84-94	278-298	8-9	24-28
	5.0	109-127	186-206	9-12	22-26	93-103	287-307	5-6	26-30
60	3.0	113-131	235-255	14-17	22-26	99-109	293-313	10-11	28-32
	5.0	111-129	217-237	8-11	22-26	110-120	304-324	6-7	30-34
70	3.0	115-133	269-289	14-17	21-25	116-126	310-330	11-12	31-35
	5.0	113-131	251-271	8-11	22-26	129-139	323-343	7-8	33-37
80	3.0	116-134	307-327	13-16	21-25	135-145	329-349	12-13	35-39
	5.0	116-134	289-309	8-11	21-25	150-160	344-364	8-9	37-41
90	3.0	119-137	348-368	13-16	21-25	155-165	349-369	13-14	38-42
	5.0	118-136	331-351	7-10	21-25	Operation Not Recommended			
100	3.0	121-139	393-413	12-15	20-24				
	5.0	120-138	377-397	7-10	20-24				

024 - Temperature Pressure Operating Data

Enter Fluid Temp (°F)	Water Flow (GPM)	Cooling				Heating			
		Suction Pressure (PSIG)	Discharge Pressure (PSIG)	Water Temp Rise (°F)	Air Temp Drop (°F)	Suction Pressure (PSIG)	Discharge Pressure (PSIG)	Water Temp Drop (°F)	Air Temp Rise (°F)
30	3.0	Operation Not Recommended				60-70	260-280	8-9	19-23
	6.0					67-77	267-287	4-5	21-25
40	3.0	108-125	188-206	19-22	21-25	73-83	274-294	10-11	22-26
	6.0	106-123	160-178	9-12	21-25	82-92	283-303	5-6	24-28
50	3.0	109-126	215-233	19-22	21-25	87-97	289-309	12-13	25-29
	6.0	108-125	187-205	9-12	21-25	98-108	300-320	6-7	27-31
60	3.0	111-128	245-263	18-21	21-25	102-112	305-325	13-14	28-32
	6.0	109-126	217-235	9-12	21-25	115-125	319-339	7-8	31-35
70	3.0	112-129	279-297	18-21	20-24	119-129	323-343	15-16	32-36
	6.0	111-128	250-268	9-12	21-25	135-145	340-360	8-9	35-39
80	3.0	114-131	315-333	17-20	20-24	137-147	342-362	17-18	35-39
	6.0	113-130	288-306	8-11	20-24	157-167	364-384	9-10	39-43
90	3.0	116-133	354-372	17-20	19-23	164-174	371-391	19-20	40-44
	6.0	115-132	330-348	8-11	20-24	Operation Not Recommended			
100	3.0	118-135	397-415	16-19	19-23				
	6.0	117-134	376-394	8-11	19-23				

Bosch Thermotechnology Corp. reserves the right to make changes without notice due to continuing engineering and technological advances | BTC 771508301 E | 09.2026

030 - Temperature Pressure Operating Data

Enter Fluid Temp (°F)	Water Flow (GPM)	Cooling				Heating			
		Suction Pressure (PSIG)	Discharge Pressure (PSIG)	Water Temp Rise (°F)	Air Temp Drop (°F)	Suction Pressure (PSIG)	Discharge Pressure (PSIG)	Water Temp Drop (°F)	Air Temp Rise (°F)
30	4.0	Operation Not Recommended				57-67	259-279	8-9	20-24
	7.5					63-73	264-284	4-5	21-25
40	4.0	108-126	195-213	19-22	22-26	69-79	269-289	9-10	23-27
	7.5	106-124	169-187	10-13	22-26	77-87	275-295	5-6	24-28
50	4.0	110-128	222-240	19-22	22-26	83-93	281-301	10-11	26-30
	7.5	108-126	195-213	10-13	22-26	92-102	289-309	6-7	28-32
60	4.0	111-129	252-270	18-21	22-26	98-108	295-315	12-13	29-33
	7.5	110-128	225-243	9-12	22-26	109-119	306-326	7-8	32-36
70	4.0	113-131	285-303	17-20	21-25	114-124	311-331	14-15	33-37
	7.5	112-130	258-276	9-12	21-25	128-138	325-345	8-9	36-40
80	4.0	114-132	322-340	17-20	21-25	136-146	331-351	15-16	37-41
	7.5	113-131	296-314	9-12	21-25	150-160	345-365	9-10	40-44
90	4.0	116-134	362-380	16-19	20-24	153-163	335-355	17-18	41-45
	7.5	115-133	337-355	8-11	21-25	Operation Not Recommended			
100	4.0	118-136	405-423	16-19	20-24				
	7.5	117-135	383-401	8-11	20-24				

036 - Temperature Pressure Operating Data

Enter Fluid Temp (°F)	Water Flow (GPM)	Cooling				Heating			
		Suction Pressure (PSIG)	Discharge Pressure (PSIG)	Water Temp Rise (°F)	Air Temp Drop (°F)	Suction Pressure (PSIG)	Discharge Pressure (PSIG)	Water Temp Drop (°F)	Air Temp Rise (°F)
30	4.5	Operation Not Recommended				55-65	240-260	8-9	18-22
	9.0					61-71	246-266	4-5	19-23
40	4.5	113-129	198-222	20-23	22-26	66-76	251-271	9-10	21-25
	9.0	111-127	166-190	10-13	23-27	74-84	258-278	5-6	22-26
50	4.5	114-130	224-248	19-22	22-26	79-89	263-283	11-12	23-27
	9.0	113-129	192-216	9-12	22-26	89-99	272-292	6-7	25-29
60	4.5	116-132	254-278	19-22	22-26	93-103	276-296	12-13	26-30
	9.0	114-130	221-245	9-12	22-26	105-115	288-308	7-8	29-33
70	4.5	117-133	287-311	18-21	21-25	109-119	291-311	14-15	29-33
	9.0	116-132	254-278	9-12	22-26	123-133	306-326	8-9	32-36
80	4.5	119-135	323-347	18-21	21-25	126-136	308-328	16-17	33-37
	9.0	117-133	291-315	9-12	21-25	144-154	325-345	8-9	36-40
90	4.5	120-136	363-387	17-20	20-24	144-154	326-346	17-18	37-41
	9.0	119-135	332-356	8-11	21-25	167-177	347-367	9-10	41-45
100	4.5	122-138	405-429	16-19	20-24	Operation Not Recommended			
	9.0	121-137	376-400	8-11	20-24				

Bosch Thermotechnology Corp. reserves the right to make changes without notice due to continuing engineering and technological advances | BTC 771508301 E | 09.2026

042 - Temperature Pressure Operating Data

Enter Fluid Temp (°F)	Water Flow (GPM)	Cooling				Heating			
		Suction Pressure (PSIG)	Discharge Pressure (PSIG)	Water Temp Rise (°F)	Air Temp Drop (°F)	Suction Pressure (PSIG)	Discharge Pressure (PSIG)	Water Temp Drop (°F)	Air Temp Rise (°F)
30	6.0	**Operation Not Recommended**				55-65	255-279	7-8	19-23
	10.5					60-70	260-284	4-5	20-24
40	6.0	109-125	202-226	17-20	22-26	67-77	268-292	8-9	21-25
	10.5	107-123	173-197	10-13	22-26	73-83	275-299	5-6	23-27
50	6.0	110-126	229-253	17-20	21-25	80-90	282-306	10-11	24-28
	10.5	109-125	199-223	9-12	22-26	88-98	291-315	6-7	26-30
60	6.0	112-128	258-282	16-19	21-25	94-104	298-322	11-12	27-31
	10.5	110-126	228-252	9-12	21-25	104-114	310-334	7-8	30-34
70	6.0	113-129	291-315	16-19	21-25	143-153	353-377	1-2	37-41
	10.5	112-128	260-284	9-12	21-25	123-133	330-354	8-9	33-37
80	6.0	115-131	328-352	15-18	20-24	128-138	336-360	14-15	34-38
	10.5	114-130	296-320	9-12	21-25	143-153	353-377	9-10	37-41
90	6.0	117-133	368-392	15-18	20-24	148-158	358-382	16-17	38-42
	10.5	115-131	337-361	8-11	20-24	166-176	378-402	9-10	42-46
100	6.0	118-134	411-435	14-17	19-23	**Operation Not Recommended**			
	10.5	117-133	381-405	8-11	20-24				

048 - Temperature Pressure Operating Data

Enter Fluid Temp (°F)	Water Flow (GPM)	Cooling				Heating			
		Suction Pressure (PSIG)	Discharge Pressure (PSIG)	Water Temp Rise (°F)	Air Temp Drop (°F)	Suction Pressure (PSIG)	Discharge Pressure (PSIG)	Water Temp Drop (°F)	Air Temp Rise (°F)
30	8.0	**Operation Not Recommended**				54-74	268-288	6-7	20-24
	12.0					57-77	272-292	4-5	20-24
40	8.0	105-121	183-203	14-17	21-25	67-87	283-303	8-9	23-27
	12.0	104-120	169-189	9-12	22-26	71-91	288-308	5-6	24-28
50	8.0	106-122	210-230	14-17	21-25	81-101	300-320	9-10	26-30
	12.0	106-122	196-216	9-12	21-25	86-106	306-326	6-7	27-31
60	8.0	108-124	241-261	14-17	21-25	97-117	319-339	10-11	29-33
	12.0	108-124	227-247	9-12	21-25	104-124	327-347	7-8	31-35
70	8.0	110-126	275-295	13-16	20-24	115-135	340-360	11-12	33-37
	12.0	109-125	261-281	9-12	20-24	123-143	350-370	8-9	35-39
80	8.0	112-128	313-333	13-16	20-24	134-154	364-384	13-14	37-41
	12.0	111-127	300-320	8-11	20-24	145-165	376-396	9-10	39-43
90	8.0	113-129	354-374	12-15	19-23	156-176	390-410	14-15	41-45
	12.0	113-129	342-362	8-11	20-24	169-189	404-424	10-11	43-47
100	8.0	115-131	399-419	12-15	19-23	**Operation Not Recommended**			
	12.0	115-131	388-408	8-11	19-23				

Bosch Thermotechnology Corp. reserves the right to make changes without notice due to continuing engineering and technological advances | BTC 771508301 E | 09.2026

060 - Temperature Pressure Operating Data

Enter Fluid Temp (°F)	Water Flow (GPM)	Cooling				Heating			
		Suction Pressure (PSIG)	Discharge Pressure (PSIG)	Water Temp Rise (°F)	Air Temp Drop (°F)	Suction Pressure (PSIG)	Discharge Pressure (PSIG)	Water Temp Drop (°F)	Air Temp Rise (°F)
30	10.0	Operation Not Recommended				49-65	217-274	5-7	18-22
	15.0					53-69	219-277	4-5	18-23
40	10.0	106-131	185-224	14-20	22-26	60-78	225-287	7-8	21-25
	15.0	106-130	171-207	10-13	22-26	63-82	228-291	5-6	21-26
50	10.0	107-133	209-255	13-19	22-26	71-92	235-301	8-9	23-28
	15.0	107-132	196-239	9-12	22-27	75-97	239-307	5-6	23-29
60	10.0	108-135	237-290	13-19	21-26	84-107	247-318	9-11	25-31
	15.0	109-134	223-273	9-13	22-26	89-114	251-324	6-7	27-33
70	10.0	110-137	268-329	13-19	21-25	98-125	260-336	10-12	29-35
	15.0	110-136	254-311	8-13	21-25	105-133	266-344	7-8	30-37
80	10.0	111-139	302-370	12-18	21-25	115-144	275-355	11-14	32-39
	15.0	112-138	290-353	9-12	21-25	123-154	282-365	8-10	34-41
90	10.0	113-141	339-415	12-18	20-24	134-166	291-377	12-15	35-43
	15.0	113-140	328-398	8-11	20-24	144-178	301-388	9-11	38-46
100	10.0	114-143	381-464	12-16	20-24	Operation Not Recommended			
	15.0	115-142	370-447	8-11	20-24				

070 - Temperature Pressure Operating Data

Enter Fluid Temp (°F)	Water Flow (GPM)	Cooling				Heating			
		Suction Pressure (PSIG)	Discharge Pressure (PSIG)	Water Temp Rise (°F)	Air Temp Drop (°F)	Suction Pressure (PSIG)	Discharge Pressure (PSIG)	Water Temp Drop (°F)	Air Temp Rise (°F)
30	10.0	Operation Not Recommended				54-70	248-305	6-8	22-26
	17.0					58-74	253-311	4-5	22-27
40	10.0	100-126	194-234	16-20	22-27	66-84	262-324	8-9	25-29
	17.0	99-124	174-212	9-13	23-28	71-90	268-331	5-6	26-31
50	10.0	101-128	217-265	15-20	22-27	79-100	279-345	10-11	28-33
	17.0	101-127	198-243	9-12	22-27	85-107	286-354	6-7	29-35
60	10.0	103-130	244-300	15-20	22-26	94-117	297-368	11-13	31-37
	17.0	102-129	225-277	8-13	22-26	101-126	307-380	7-8	33-39
70	10.0	104-132	275-337	15-19	21-26	110-137	318-394	12-14	35-41
	17.0	103-130	256-315	8-13	21-26	120-148	331-409	8-9	37-44
80	10.0	105-133	309-379	14-19	21-25	130-159	343-423	13-16	39-46
	17.0	105-133	290-356	8-11	21-26	141-172	357-440	8-10	42-49
90	10.0	107-136	346-424	14-18	21-25	153-185	370-456	14-17	44-52
	17.0	106-134	329-401	8-11	21-25	165-199	386-473	9-11	46-54
100	10.0	108-138	388-472	13-18	20-24	Operation Not Recommended			
	17.0	108-137	372-451	8-11	20-24				

Bosch Thermotechnology Corp.
Londonderry, NH • Watertown, MA • Ft. Lauderdale, FL

Bosch Thermotechnology Corp. reserves the right to make changes without notice due to continuing engineering and technological advances | BTC 771508301 E | 09.2026

Tel: 1-800-283-3787 | www.bosch-homecomfort.us