Spare parts list

Bosch Climate 5000 Series - Gen 4 Multi Zone Outdoor Unit

BMS500-AAM018-1CSXRD

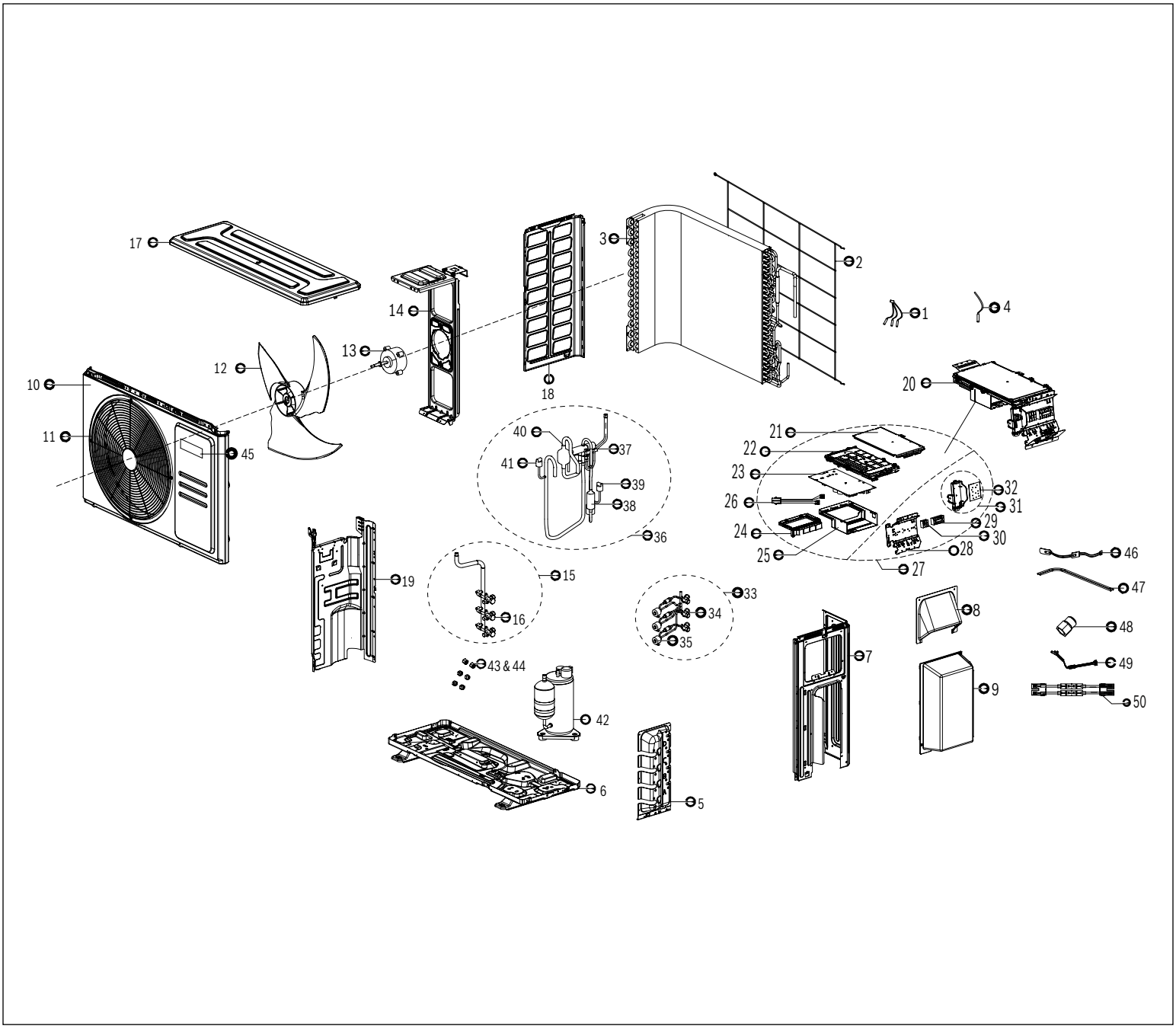

BOSCH

Bosch Thermotechnology Corp.
Tel: 1-800-283-3787
www.bosch-homecomfort.us

Pos.	Description	Qty	BMS500-AAM018-1CSXRD	Recommended Stock	Remarks
1	Combination sensor	1.0	8733979544	✓	
2	Rear net	1.0	8733956445		
3	Condenser	1.0	8733956438	✓	
4	Pipe temperature sensor	1.0	8733979545		
5	Valve plate	1.0	8733956535		
6	Chassis assembly	1.0	8733956536		
7	Right clapboard	1.0	8733956537		
8	Big handle	1.0	8733945579		
9	Water collector	1.0	8733956538		
10	Front panel	1.0	8733976902		
11	Air outlet grille	1.0	8733956434		
12	Axial flow fan	1.0	8733956435	✓	
13	Brushless DC motor	1.0	8733976903	✓	
14	Motor bracket	1.0	8733956437		
15	Gas valve assembly	1.0	8733979547	✓	
16	Gas valve	3.0	8733979548		
17	Top cover	1.0	8733956440		
18	Left supporter	1.0	8733956439		
19	Partition board	1.0	8733956540		
20	Electronic control box subassembly	1.0	8733979549		
21	Cover of electronic control box	1.0	8733956542		
22	Electronic installing box	1.0	8733956543		
23	Main control board	1.0	8733979550	✓	
24	Support of electronic control box	1.0	8733956545		
25	Electronic installing box	1.0	8733956546		
26	HV junction cable	1.0	8733979551		
27	Terminal board subassembly	1.0	8733979552	✓	
28	Terminal board	1.0	8733956548		
29	Terminal	3.0	8733969136	✓	
30	Wire joint	1.0	8733969112	✓	
31	Key board box	1.0	8733979599		
32	Key board	1.0	8733979600		
33	Liquid valve assembly	1.0	8733979601	✓	
34	High pressure valve	3.0	8733980952		
35	Electronic expansion valve	3.0	8733979602	✓	
36	4-Way valve assembly	1.0	8733979603	✓	
37	4-Way valve	1.0	8733969247	✓	
38	Muffler	1.0	8733956552		
39	Pressure controller	1.0	8733976946	✓	
40	Muffler	1.0	8733979604		
41	Pressure switch	1.0	8733979605	✓	

BMS500-AAM018-1CSXRD

Pos.	Description	Qty	BMS500-AAM018-1CSXRD	Recommended Stock	Remarks
42	DC inverter rotary compressor	1.0	8733956554	✓	
43	Flare nut	3.0	8733969147		
44	Flare nut	3.0	8733969115		
45	Trademark	2.0	8733969193		
46	Crankcase electric heater	1.0	8733956456		
47	Heater	1.0	8733956457		
48	Hose joint	1.0	8733979606		
49	Compressor wires	1.0	8733956399		
50	Wire Harness Fuse	1.0	8733982585	✓	

BMS500-AAM018-1CSXRD

Bosch Climate 5000 Series - Gen 4 Multi Zone Outdoor Unit

BMS500-AAM018-1CSXHD

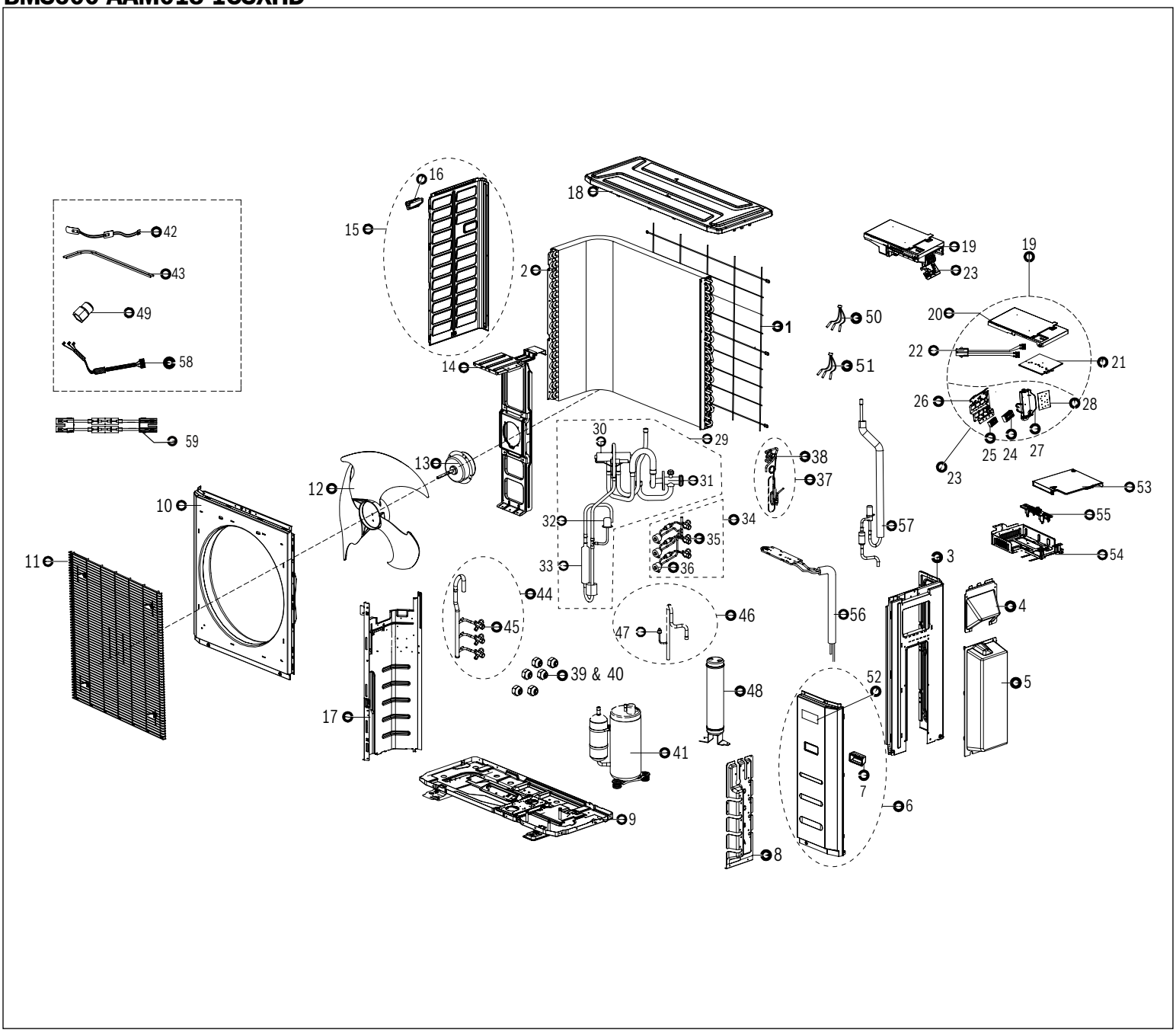

Bosch Thermotechnology Corp.
Tel: 1-800-283-3787
www.bosch-homecomfort.us

Pos.	Description	Qty	BMS500-AAM018-1CSXHD	Recommended Stock	Remarks
1	Rear net	1.0	8733969254		
2	Condenser assembly	1.0	8733979607	✓	
3	Guard cover	1.0	8733979608		
4	Big handle	1.0	8733953866		
5	Water collector	1.0	8733945555		
6	Front right clapboard assembly	1.0	8733976911		
7	Handle	1.0	7738005674		
8	Valve plate	1.0	8733979610		
9	Chassis	1.0	8733945567		
10	Front panel	1.0	8733956371		
11	Air outlet grille	1.0	8733956372		
12	Axial flow fan	1.0	8733969234	✓	
13	Brushless dc motor	1.0	8733979612	✓	
14	Motor bracket	1.0	8733956373		
15	Left side plate assembly	1.0	8733969223		
16	Small handle	1.0	8733969224		
17	Partition board	1.0	8733979613		
18	Top cover	1.0	8733969238		
19	Electronic control box subassembly	1.0	8733979614	✓	
20	Electronic installing box	1.0	8733979615		
21	Main control board	1.0	8733979616		
22	HV junction cable	1.0	8733979551		
23	Terminal board subassembly	1.0	8733979617	✓	
24	Terminal	3.0	8733979618	✓	
25	Wire joint	1.0	8733979619	✓	
26	Terminal instalation	1.0	8733979620		
27	DR installing foundation	1.0	8733979621		
28	Key board	1.0	8733979622		
29	4-Way valve assembly	1.0	8733979623	✓	
30	Four-Way valve	1.0	8733969247	✓	
31	Gas valve	1.0	8733979624		
32	Pressure controller	1.0	8733976946	✓	
33	Muffler	1.0	8733979625		
34	Liquid valve assembly	1.0	8733979626	✓	
35	High pressure valve	3.0	8733980952	✓	
36	Electronic expansion valve	3.0	8733979602	✓	
37	Liquid valve assembly	1.0	8733979627	✓	
38	Liquid valve	1.0	8733979628	✓	
39	Flare nut	3.0	8733969147		
40	Flare nut	3.0	8733969115		
41	DC inverter rotary compressor	1.0	8733969205	✓	

BMS500-AAM018-1CSXHD

Pos.	Description	Qty	BMS500-AAM018-1CSXHD	Recommended Stock	Remarks
42	Heater	1.0	8733956380		
43	Crankcase electric heating strip	1.0	8733956456		
44	Gas valve assembly	1.0	8733979629	✓	
45	Gas valve	3.0	8733979548		
46	Suction pipe assembly	1.0	8733979630		
47	Pressure controller	1.0	8733979605	✓	
48	Accumulator cylinder	1.0	8733979631		
49	Hose joint	1.0	8733979632		
50	Pipe temperature sensor	1.0	8733979633	✓	
51	Combination sensor	1.0	8733979544	✓	
52	Trademark	1.0	8733969193		
53	Cover plate	1.0	8733969257		
54	Electronic installing box	1.0	8733979634	✓	
55	U-typed support with copper pipe	1.0	8733969244		
56	Radiator	1.0	8733979635		
57	Electronic expansion valve	1.0	8733979636		
58	Compressor wires	1.0	8733956399	✓	
59	Wire Harness Fuse	1.0	8733982586	✓	

BMS500-AAM018-1CSXHD

Bosch Climate 5000 Series - Gen 4 Multi Zone Outdoor Unit

BMS500-AAM027-1CSXRD | BMS500-AAM027-1CSXHD

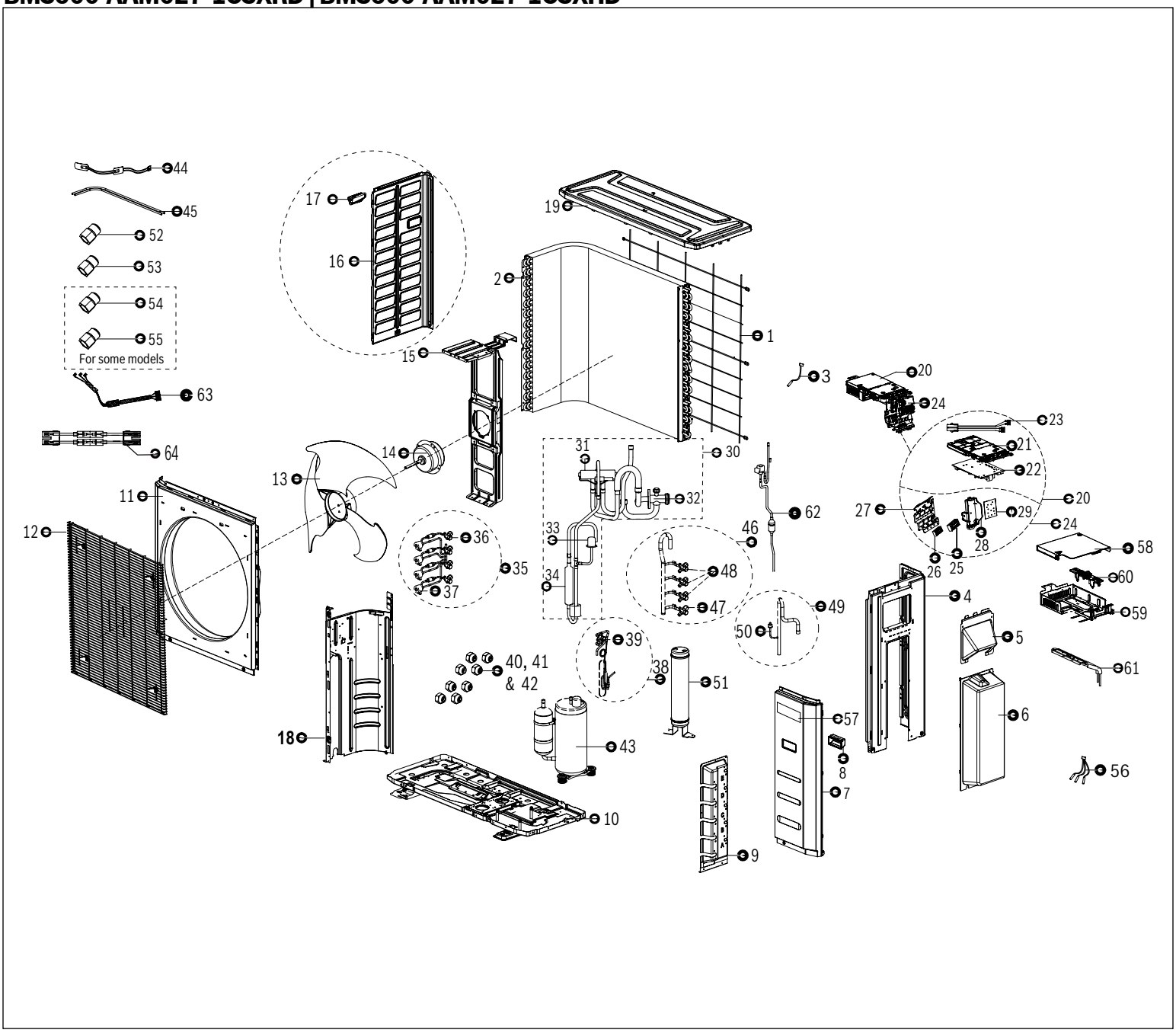

Bosch Thermotechnology Corp.
Tel: 1-800-283-3787
www.bosch-homecomfort.us

Pos.	Description	Qty	BMS500-AAM027-1CSXHD	BMS500-AAM027-1CSXRD	Recommended Stock	Remarks
1	Rear net	1.0	8733969254	8733969254		
2	Condenser	1.0	8733979639	8733979607	✓	
3	Pipe temperature sensor	1.0	8733979637	8733979637	✓	
4	Guard cover	1.0	8733979608	8733979608		
5	Big handle	1.0	8733953866	8733953866		
6	Water collector	1.0	8733945555	8733945555		
7	Front right clapboard	1.0	8733976911	8733976911		
8	Handle	1.0	7738005674	7738005674		
9	Valve plate	1.0	8733945558	8733945558		
10	Chassis	1.0	8733945567	8733945567		
11	Front panel	1.0	8733956371	8733956371		
12	Air outlet grille	1.0	8733956372	8733956372		
13	Axial flow fan	1.0	8733969234	8733969234	✓	
14	Brushless DC motor	1.0	8733979612	8733979612	✓	
15	Supporter subassembly of fan motor	1.0	8733979640	8733956373		
16	Left side plate subassembly	1.0	8733969223	8733969223		
17	Small handle	1.0	8733969224	8733969224		
18	Partition board	1.0	8733979613	8733979613		
19	Top cover	1.0	8733969238	8733969238		
20	Electronic control box subassembly	1.0	8733979641	8733979642	✓	
21	Electronic installing box	1.0	8733979615	8733979615		
22	Main control board	1.0	8733979643	8733979644	✓	
23	HV junction cable	1.0	8733979551	8733979551		
24	Terminal board subassembly	1.0	8733979645	8733979645		
25	Wire joint	4.0	8733979618	8733979618		
26	Wire joint	1.0	8733979619	8733979619	✓	
27	Terminal instalation	1.0	8733979620	8733979620	✓	
28	DR installing foundation	1.0	8733979621	8733979621		
29	Key board	1.0	8733979622	8733979622		
30	4-Way valve assembly	1.0	8733979646	8733979623	✓	
31	Four-way valve	1.0	8733969247	8733969247	✓	
32	Gas valve	1.0	8733979624	8733979624		
33	Pressure controller	1.0	8733976946	8733976946	✓	
34	Muffler	1.0	8733979647	8733979625		
35	Liquid valve assembly	1.0	8733979648	8733979648	✓	
36	High pressure valve	4.0	8733980952	8733980952		
37	Electronic expansion valve	4.0	8733979602	8733979602	✓	
38	Liquid valve assembly	1.0	8733979627	8733979627	✓	
39	Liquid valve	1.0	8733979628	8733979628		
40	Flare nut	4.0	8733969147	8733969147		
41	Flare nut	1.0	8733969148	8733969148		

BMS500-AAM027-1CSXRD | BMS500-AAM027-1CSXHD

Pos.	Description	Qty	BMS500-AAM027-1CSXHD	BMS500-AAM027-1CSXRD	Recommended Stock	Remarks
42	Flare nut	3.0	8733969115	8733969115		
43	DC inverter rotary compressor	1.0	8733956503	8733969205	✓	
44	Heater	1.0	8733956380	8733956380		
45	Crankcase electric heater	1.0	8733956381	8733956456		
46	Gas valve assembly	1.0	8733979649	8733979649	✓	
47	Gas valve	1.0	8733979650	8733979650		
48	Gas valve	3.0	8733979548	8733979548		
49	Suction pipe assembly	1.0	8733979651	8733979630		
50	Pressure controller	1.0	8733979605	8733979605		
51	Accumulator cylinder	1.0	8733979631	8733979631		
52	Hose joint	3.0	8733979606	8733979606	✓	
53	Hose joint	1.0	8733979652	N/A		
54	Hose joint	1.0	8733979632	N/A		
55	Pipe joint	1.0	8733979653	8733979653		
56	Combination sensor	1.0	8733979544	8733979544	✓	
57	Trademark	1.0	8733969193	8733969193		
58	Cover plate	1.0	8733969257	8733969257		
59	Electronic installing box subassembly	1.0	8733979634	8733979634	✓	
60	U-typed support with copper pipe	1.0	8733969244	8733969244		
61	Radiator	1.0	8733979635	8733979635	✓	
62	Electronic expansion valve	1.0	8733979636	8733979636	✓	
63	Compressor wires	1.0	8733956399	8733956399		
64	Wire Harness Fuse	1.0	8733982586	8733982586	✓	

BMS500-AAM027-1CSXRD | BMS500-AAM027-1CSXHD

Bosch Climate 5000 Series - Gen 4 Multi Zone Outdoor Unit

BMS500-AAM036-1CSXRD

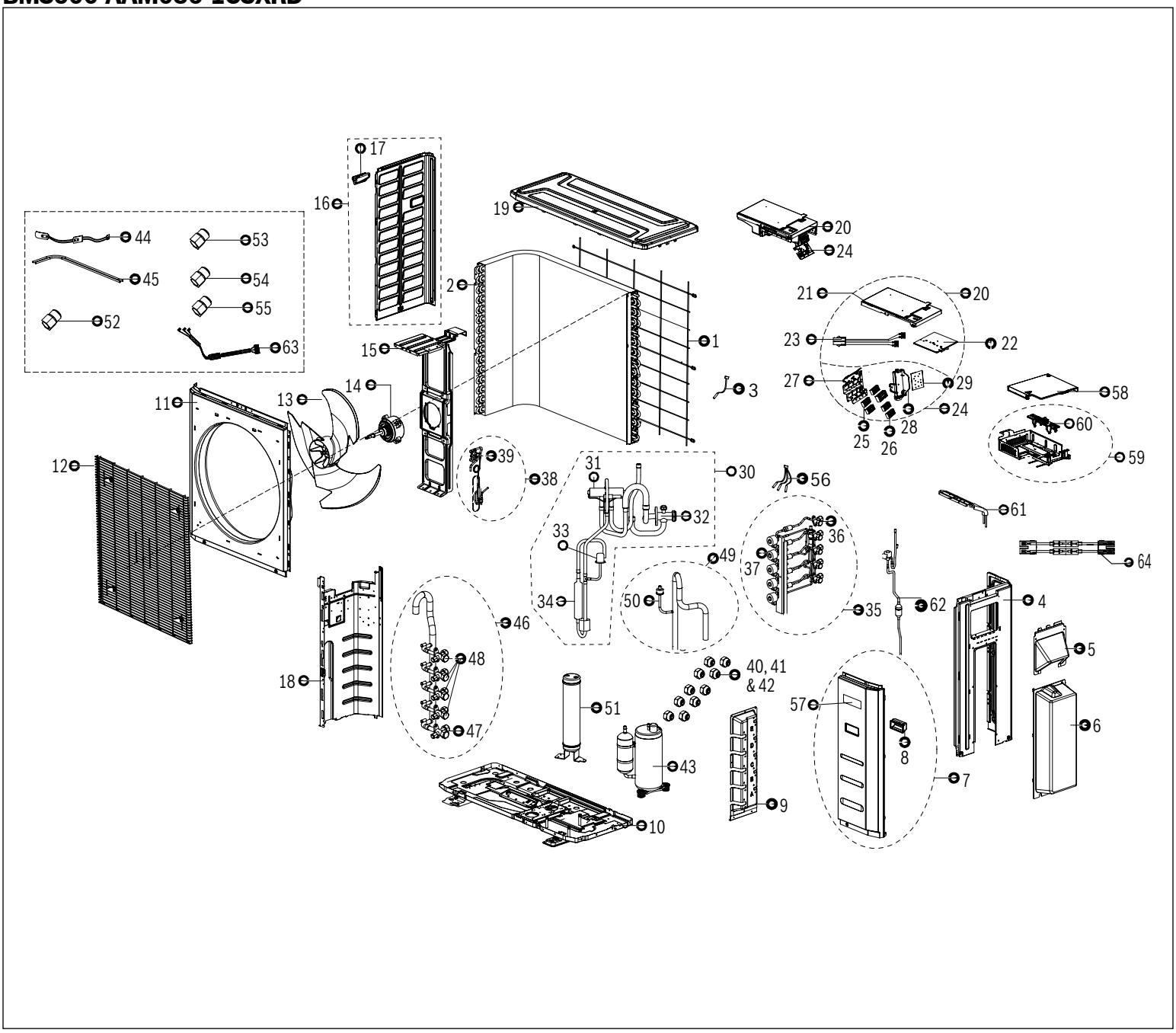

BOSCH

Bosch Thermotechnology Corp.
Tel: 1-800-283-3787
www.bosch-homecomfort.us

Pos.	Description	Qty	BMS500-AAM036-1CSXRD	Recommended Stock	Remarks
1	Rear net	1.0	8733969254		
2	Condenser	1.0	8733979639	✓	
3	Pipe temperature sensor	1.0	8733979654	✓	
4	Guard cover	1.0	8733979608		
5	Big handle	1.0	8733953866		
6	Water collector	1.0	8733945555		
7	Front right clapboard assembly	1.0	8733976911		
8	Handle	1.0	7738005674		
9	Valve plate	1.0	8733979655		
10	Chassis	1.0	8733945567		
11	Front panel	1.0	8733956371		
12	Air outlet grille	1.0	8733956372		
13	Axial flow fan	1.0	8733969234	✓	
14	Brushless DC motor	1.0	8733979612	✓	
15	Fan motor support	1.0	8733979640		
16	Left side plate assembly	1.0	8733969223		
17	Small handle	1.0	8733969224		
18	Partition board	1.0	8733979613		
19	Top cover	1.0	8733969238		
20	Electronic control box subassembly	1.0	8733979656	✓	
21	Electronic installing box	1.0	8733979615		
22	Main control board	1.0	8733979657	✓	
23	HV junction cable	1.0	8733979615		
24	Terminal board subassembly	1.0	8733979551	✓	
25	Wire joint	5.0	8733979618	✓	
26	Wire joint	1.0	8733979619	✓	
27	Termination installation	1.0	8733979738		
28	DR installing foundation	1.0	8733979621		
29	Key board	1.0	8733979622	✓	
30	4-Way valve assembly	1.0	8733979646	✓	
31	Four-way valve	1.0	8733969247	✓	
32	Gas valve	1.0	8733979624	✓	
33	Pressure controller	1.0	8733976946	✓	
34	Muffler	1.0	8733979647		
35	Liquid valve assembly	1.0	8733979659	✓	
36	High pressure valve	5.0	8733980952		
37	Electronic expansion valve	5.0	8733979602	✓	
38	Liquid valve assembly	1.0	8733979627	✓	
39	Liquid valve	1.0	8733979628		
40	Flare nut	5.0	8733969147		
41	Flare nut	1.0	8733969148		

BMS500-AAM036-1CSXRD

Pos.	Description	Qty	BMS500-AAM036-1CSXRD	Recommended Stock	Remarks
42	Flare nut	4.0	8733969115		
43	DC inverter rotary compressor	1.0	8733956503	✓	
44	Heater	1.0	8733956380		
45	Crankcase electric heater	1.0	8733956381		
46	Gas valve assembly	1.0	8733980953	✓	
47	Gas valve	1.0	8733979650		
48	Gas valve	4.0	8733979548		
49	Suction pipe assembly	1.0	8733979651		
50	Pressure controller	1.0	8733979605	✓	
51	Accumulator cylinder	1.0	8733979631		
52	Hose joint	1.0	8733979652		
53	Hose joint	1.0	8733979632		
54	Hose joint	3.0	8733979606		
55	Pipe joint	1.0	8733979653		
56	Combination sensor	1.0	8733979544	✓	
57	Trademark	1.0	8733969193		
58	Cover plate	1.0	8733969257		
59	Electronic installing box subassembly	1.0	8733979634		
60	U-typed support with copper pipe	1.0	8733969244		
61	Radiator	1.0	8733979635		
62	Electronic expansion valve	1.0	8733979636		
63	Compressor wires	1.0	8733956399		
64	Wire Harness Fuse	1.0	8733982586	✓	

BMS500-AAM036-1CSXRD

Bosch Climate 5000 Series - Gen 4 Multi Zone Outdoor Unit

BMS500-AAM036-1CSXHD

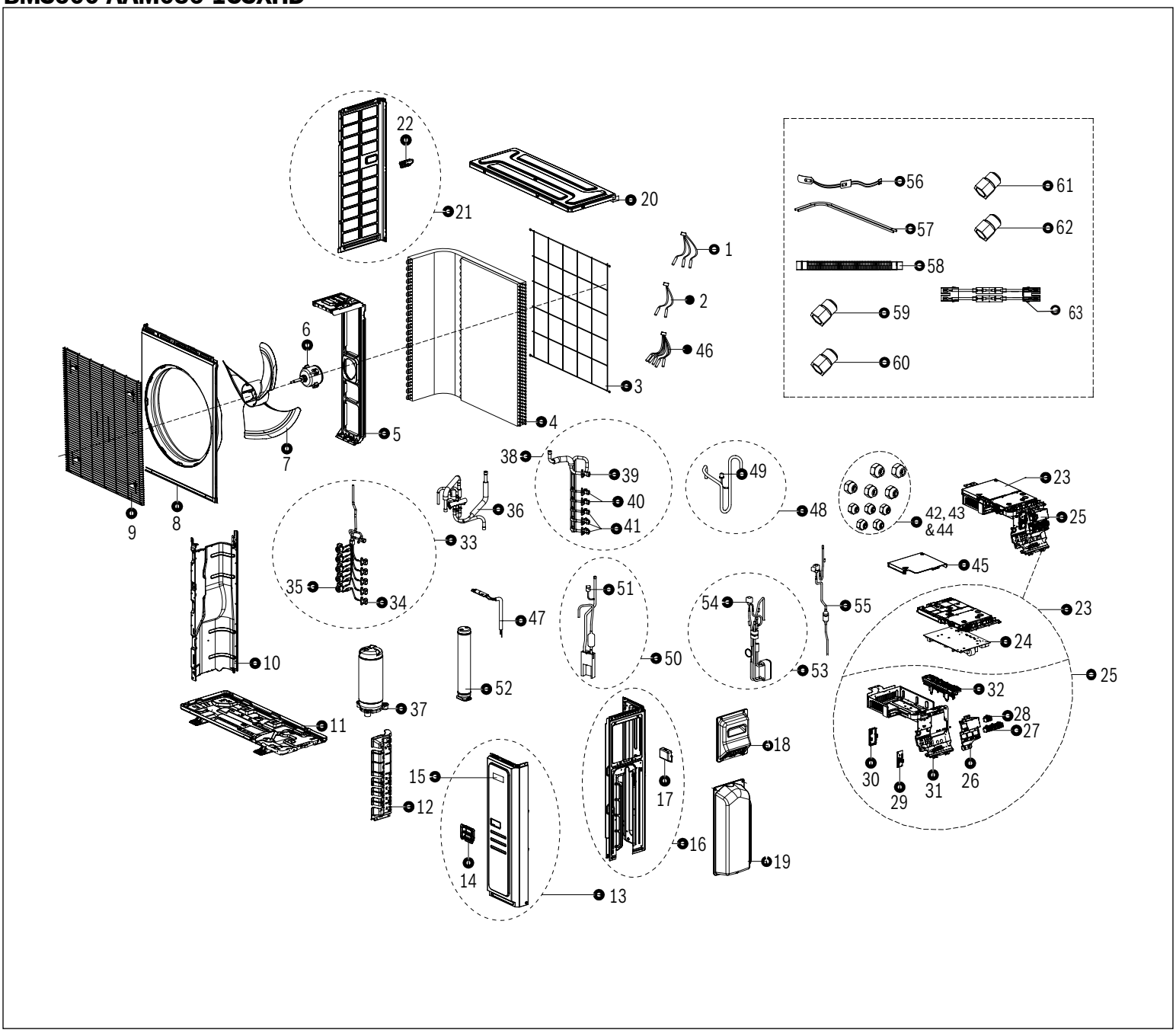

BOSCH

Bosch Thermotechnology Corp.
Tel: 1-800-283-3787
www.bosch-homecomfort.us

Pos.	Description	Qty	BMS500-AAM036-1CSXHD	Recommended Stock	Remarks
1	Combination sensor	1.0	8733979544		
2	Pipe temperature sensor	1.0	8733979660	✓	
3	Rear net	1.0	8733979661		
4	Condenser	1.0	8733979662	✓	
5	Supporter subassembly of fan motor	1.0	8733979663		
6	Brushless DC motor	1.0	8733979664	✓	
7	Axial flow fan	1.0	8733979665	✓	
8	Front panel	1.0	8733979666		
9	Air outlet grille	1.0	8733979667		
10	Partition board	1.0	8733979668	✓	
11	Chassis	1.0	8733979669		
12	Valve plate	1.0	8733979670		
13	Front right clapboard assembly	1.0	8733979671		
14	Small handle	1.0	8733979672		
15	Trademark	2.0	8733969193		
16	Rear right clapboard assembly	1.0	8733979673		
17	Small handle	1.0	8733979672		
18	Big handle	2.0	8733979674		
19	Water collector	2.0	8733979675		
20	Top cover	1.0	8733979676		
21	Left side plate assembly	4.0	8733979677		
22	Small handle	2.0	8733969224		
23	Electronic control box subassembly	2.0	8733979678		
24	Main control board	1.0	8733979679	✓	
25	Terminal board subassembly	1.0	8733979680		
26	Terminal board	1.0	8733979681	✓	
27	Wire joint	1.0	8733976937		
28	Wire joint	5.0	8733979618	✓	
29	Key board	1.0	8733979600	✓	
30	Electronic installing box	1.0	8733979682	✓	
31	Electronic installing box	1.0	8733979683		
32	U-typed support with copper pipe	1.0	8733969244		
33	Liquid valve assembly	1.0	8733979684	✓	
34	High pressure valve	5.0	8733980952		
35	Electronic expansion valve	5.0	8733979685	✓	
36	4-Way valve	1.0	8733979686	✓	
37	DC inverter rotary compressor	1.0	8733979687	✓	
38	Gas valve assembly	1.0	8733979688	✓	
39	Gas valve	2.0	8733979689		
40	Gas valve	4.0	8733979650		
41	Gas valve	6.0	8733979548		

BMS500-AAM036-1CSXHD

Pos.	Description	Qty	BMS500-AAM036-1CSXHD	Recommended Stock	Remarks
42	Flare nut	5.0	8733969147		
43	Flare nut	2.0	8733969148		
44	Flare nut	3.0	8733969115		
45	Cover plate	1.0	8733969257		
46	Pipe temperature sensor	1.0	8733979654	✓	
47	Radiator	1.0	8733979690		
48	Suction pipe assembly	1.0	8733979691		
49	Pressure controller	1.0	8733979605	✓	
50	Discharge pipe assembly	1.0	8733979692		
51	Pressure switch	1.0	8733956505		
52	Gas-liquid separator	1.0	8733979693	✓	
53	Plate heat exchanger subassembly	1.0	8733979694		
54	Electronic expansion valve	1.0	8733979695	✓	
55	Electronic expansion valve	1.0	8733979696	✓	
56	Crankcase electric heating strip	1.0	8733976928		
57	Heater	1.0	8733956380		
58	Drain connection	1.0	8733979697		
59	Hose joint assembly	2.0	8733979652		
60	Hose joint assembly	2.0	8733979632		
61	Hose joint assembly	1.0	8733979606		
62	Pipe joint subassembly	2.0	8733979653		
63	Wire Harness Fuse	1.0	8733982586	✓	

BMS500-AAM036-1CSXHD

Bosch Climate 5000 Series - Gen 4 Multi Zone Outdoor Unit

BMS500-AAM048-1CSXRD

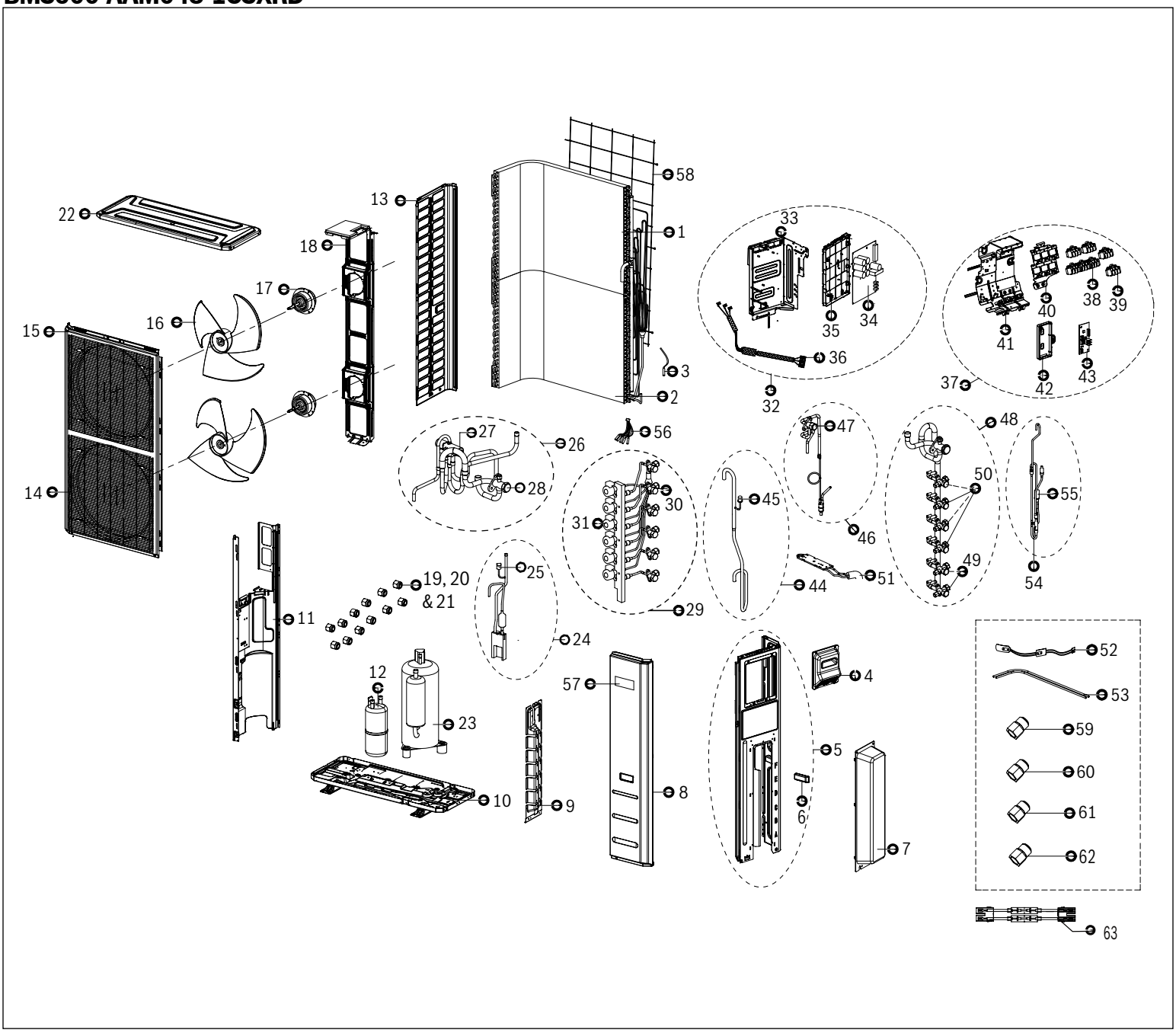

BOSCH

Bosch Thermotechnology Corp.
Tel: 1-800-283-3787
www.bosch-homecomfort.us

Pos.	Description	Qty	BMS500-AAM048-1CSXRD	Recommended Stock	Remarks
1	Condenser top section	1.0	8733976965	✓	
2	Condenser bottom section	1.0	8733979698	✓	
3	Pipe temperature sensor	1.0	8733979699	✓	
4	Big handle assembly	1.0	8733979674		
5	Rear right clapboard assembly	1.0	8733979700		
6	Handle	1.0	7738005674		
7	Water collector	1.0	8733945548		
8	Front right clapboard assembly	1.0	8733945562		
9	Valve plate	1.0	8733979703		
10	Chassis assembly	1.0	8733945565		
11	Partition board assembly	1.0	8733945559		
12	Liquid-storage tank	1.0	8733976972		
13	Left side plate assembly of cabinet	1.0	8733945574		
14	Air outlet grille	2.0	8733956372		
15	Front panel	1.0	8733945569		
16	Axial fan	2.0	8733976975	✓	
17	Brushless DC motor	2.0	8733976976	✓	
18	Supporter subassembly of fan motor	1.0	8733945563		
19	Flare nut	6.0	8733969147		
20	Flare nut	2.0	8733969148		
21	Flare nut	4.0	8733969115		
22	Top cover assembly	1.0	8733979704		
23	DC inverter rotary compressor	1.0	8733956513	✓	
24	Discharge pipe assembly	1.0	8733979705		
25	Muffler	1.0	8733956567		
26	4-Way valve assembly	1.0	8733979706	✓	
27	Four-way valve	1.0	8733979707	✓	
28	Gas valve	1.0	8733979624		
29	Liquid valve assembly	1.0	8733979708	✓	
30	High pressure valve	6.0	8733980952	✓	
31	Electronic expansion valve	6.0	8733979709		
32	Electronic control box subassembly	1.0	8733979710	✓	
33	Installation plate of electric parts subassembly	1.0	8733976984		
34	Outdoor main control board subassembly	1.0	8733979711	✓	
35	Electronic installing box	1.0	8733976988		
36	Compressor wire subassembly	1.0	8733956591		
37	Terminal board subassembly	1.0	8733979712	✓	
38	Wire joint	1.0	8733976937		
39	Wire joint	6.0	8733979618	✓	
40	Terminal board	1.0	8733979681		
41	Terminal instalation subassembly	1.0	8733979713		

BMS500-AAM048-1CSXRD

Pos.	Description	Qty	BMS500-AAM048-1CSXRD	Recommended Stock	Remarks
42	Electronic installing box	1.0	8733979682	✓	
43	Key board subassembly	1.0	8733979600		
44	Suction pipe assembly	1.0	8733979714		
45	Pressure controller	1.0	8733979605	✓	
46	Liquid valve assembly	1.0	8733979715		
47	Liquid valve	1.0	8733979628		
48	Gas valve assembly	1.0	8733979716	✓	
49	Gas valve	2.0	8733979650		
50	Gas valve	4.0	8733979548		
51	Radiator subassembly	1.0	8733979717		
52	Crankcase electric heating strip	1.0	8733956526		
53	Heater	1.0	8733956380		
54	Electronic expansion valve subassembly	1.0	8733979718	✓	
55	Electronic expansion valve body	1.0	8733956578	✓	
56	Combination sensor	1.0	8733976995	✓	
57	Trademark	1.0	8733969193		
58	Rear net	1.0	8733945570		
59	Hose joint assembly	2.0	8733979652		
60	Hose joint assembly	2.0	8733979632		
61	Hose joint assembly	1.0	8733979606		
62	Pipe joint subassembly	2.0	8733979653		
63	Wire Harness Fuse	1.0	8733982586	✓	

BMS500-AAM048-1CSXRD

Bosch Climate 5000 Series - Gen 4 Multi Zone Outdoor Unit

BMS500-AAM048-1CSXHD

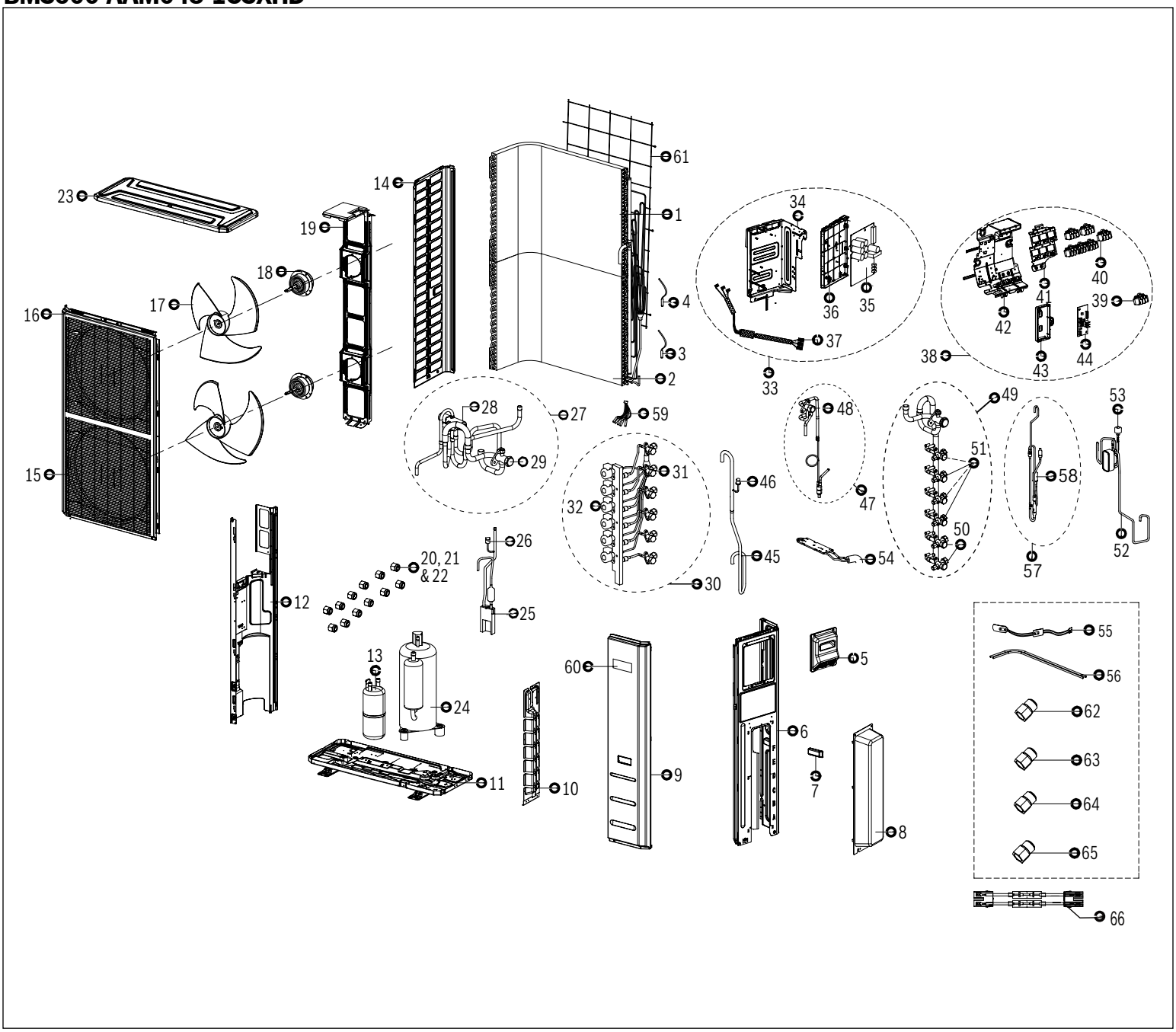

Bosch Thermotechnology Corp.
Tel: 1-800-283-3787
www.bosch-homecomfort.us

Pos.	Description	Qty	BMS500-AAM048-1CSXHD	Recommended Stock	Remarks
1	Condenser top section	1.0	8733979719	✓	
2	Condenser bottom section	1.0	8733979720	✓	
3	Pipe temperature sensor	1.0	8733979660	✓	
4	Pipe temperature sensor	1.0	8733979699	✓	
5	Big handle assembly	1.0	8733979674		
6	Rear right clapboard	1.0	8733979700		
7	Handle	1.0	7738005674		
8	Water collector	1.0	8733945548		
9	Front right clapboard	1.0	8733945562		
10	Valve plate	1.0	8733979703		
11	Chassis assembly	1.0	8733979721		
12	Partition board assembly	1.0	8733979722		
13	Liquid-storage tank	1.0	8733979723		
14	Left side plate	1.0	8733945574		
15	Air outlet grille	2.0	8733956372		
16	Front panel	1.0	8733945569		
17	Axial fan	2.0	8733976975	✓	
18	Brushless DC motor	2.0	8733976976	✓	
19	Fan motor support	1.0	8733979724		
20	Flare nut	6.0	8733969147		
21	Flare nut	2.0	8733969148		
22	Flare nut	4.0	8733969115		
23	Top cover	1.0	8733979704		
24	DC inverter rotary compressor	1.0	8733979725	✓	
25	Discharge pipe	1.0	8733979726		
26	Pressure controller	1.0	8733976946	✓	
27	4-Way valve assembly	1.0	8733979727	✓	
28	Four-way valve	1.0	8733979707	✓	
29	Gas valve	1.0	8733979624		
30	Liquid valve assembly	1.0	8733979708	✓	
31	High pressure valve	6.0	8733980952		
32	Electronic expansion valve	6.0	8733979709	✓	
33	Electronic control box subassembly	1.0	8733979728	✓	
34	Installation plate of electric parts	1.0	8733979729		
35	Outdoor main control board	1.0	8733979730	✓	
36	Electronic installing box	1.0	8733976988		
37	Compressor wire	1.0	8733979731		
38	Terminal board subassembly	1.0	8733979712	✓	
39	Wire joint	1.0	8733976937		
40	Wire joint	6.0	8733979618	✓	
41	Terminal board	1.0	8733979681		

BMS500-AAM048-1CSXHD

Pos.	Description	Qty	BMS500-AAM048-1CSXHD	Recommended Stock	Remarks
42	Terminal instalation	1.0	8733979713		
43	Electronic installing box	1.0	8733979682		
44	Key board	1.0	8733979600	✓	
45	Suction pipe	1.0	8733979732		
46	Pressure controller	1.0	8733979605	✓	
47	Liquid valve assembly	1.0	8733979715		
48	Liquid valve	1.0	8733979628		
49	Gas valve assembly	1.0	8733979716	✓	
50	Gas valve	2.0	8733979650		
51	Gas valve	4.0	8733979548		
52	Plate heat exchanger	1.0	8733979733	✓	
53	Electronic expansion valve	1.0	8733979734	✓	
54	Radiator	1.0	8733979735		
55	Crankcase electric heating strip	1.0	8733956526		
56	Heater	1.0	8733956380		
57	Electronic expansion valve subassembly	1.0	8733979736	✓	
58	Electronic expansion valve body	1.0	8733979737		
59	Combination sensor	1.0	8733976995	✓	
60	Trademark	1.0	8733969193		
61	Rear net	1.0	8733945570		
62	Hose joint	2.0	8733979652		
63	Hose joint	2.0	8733979632		
64	Hose joint	1.0	8733979606		
65	Pipe joint	2.0	8733979653		
66	Wire Harness Fuse	1.0	8733982586	✓	

BMS500-AAM048-1CSXHD

Parts Pricing & Availability

For current spare parts pricing & availability information, please visit arc.bosch-homecomfort.us or scan the code below.

SCAN ME